EC 8651 - TRANSMISSION LINES AND RF SYSTEMS

Dr.M.Sivakumar/ECE, MSAJCE

UNIT I
TRANSMISSION LINE THEORY

General theory of Transmission lines - the transmission line - general solution - The infinite line - Wavelength, velocity of propagation - Waveform distortion - the distortion-less line - Loading and different methods of loading - Line not terminated in Z0 - Reflection coefficient - calculation of current, voltage, power delivered and efficiency of transmission - Input and transfer impedance - Open and short circuited lines - reflection factor and reflection loss

Introduction

The transfer of energy from one point to another takes place through either wave guides or transmission lines

Transmission lines always consist of at least two separate conductors between which a voltage can exist

Wave guides involve only one conductor

There are two types of commonly used transmission lines

1. Parallel wire (balanced) line
2. Coaxial (unbalanced) line

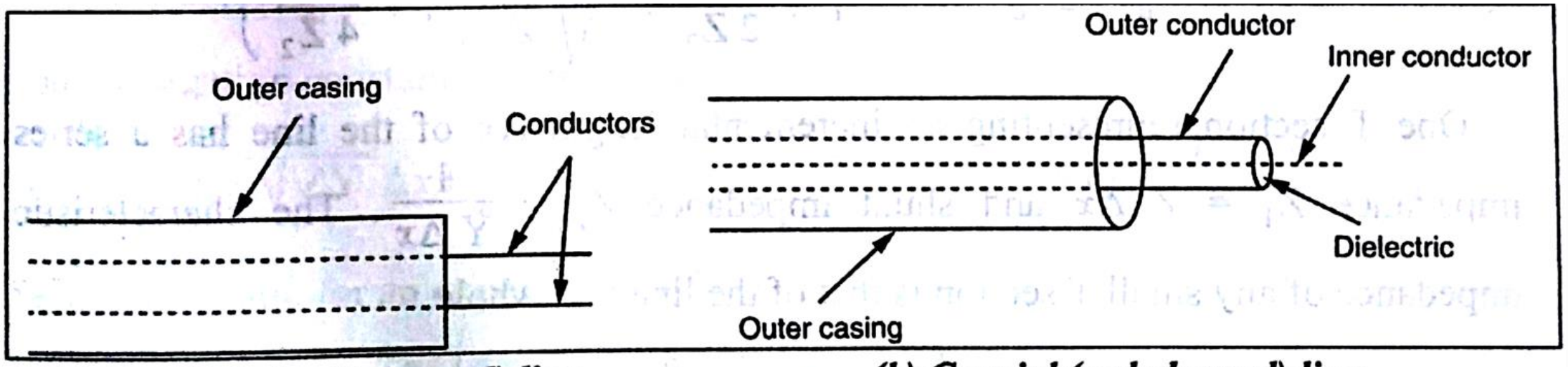

(a) Parallel wire (balanced) line *(b) Coaxial (unbalanced) line*

Transmission lines

Transmission Line as Cascaded T sections

To study the behaviour of transmission line, a transmission can be considered to be made up of a number of identical symmetrical T sections connected in series

If the last section is terminated with its characteristic impedance, the input impedance at the first section is Z_0

Each section is terminated by the input impedance of the following section

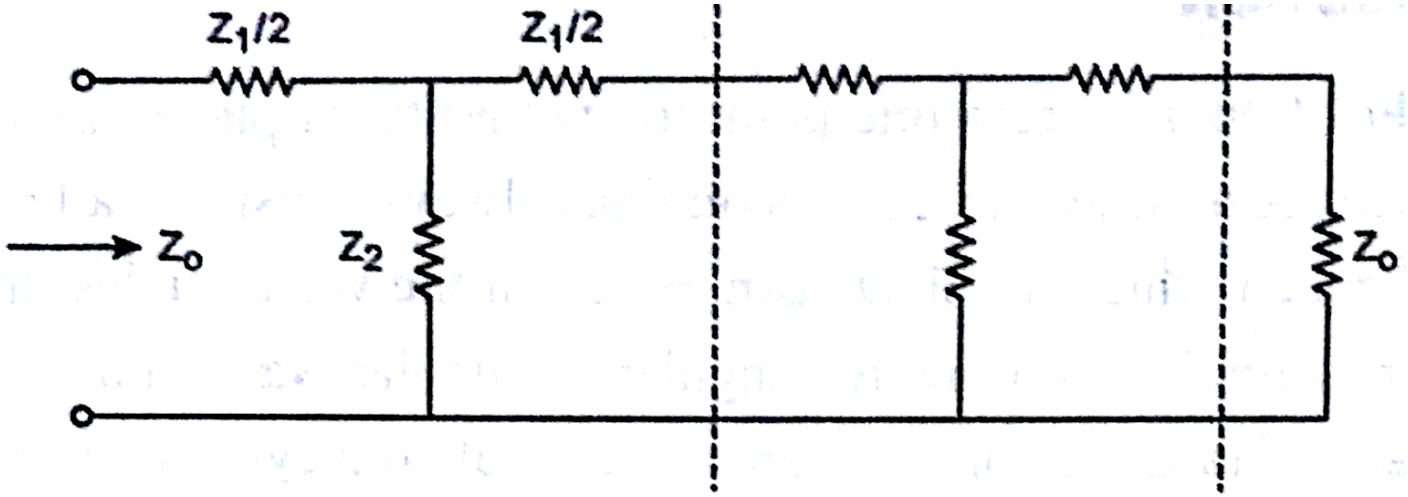

A line of cascaded T sections

The characteristic impedance for a T section is

$$Z_{0T} = \sqrt{Z_1 Z_2 \left(1 + \frac{Z_1}{4 Z_2}\right)}$$

If 'n' number of T sections are cascaded and if the sending and receiving currents are I_S and I_R respectively, then

$$I_S = I_R \, e^{n\gamma}$$

where γ is the propagation constant for one T section

$$\gamma = \alpha + j\beta$$

$$e^{\gamma} = e^{\alpha + j\beta} = 1 + \frac{Z_1}{2 Z_2} + \sqrt{\frac{Z_1}{Z_2}\left(1 + \frac{Z_1}{4 Z_2}\right)}$$

One T section representing an incremental length Δx of the line has a series impedance $Z_1 = Z\ \Delta x$

shunt impedance $Z_2 = \dfrac{1}{Y\ \Delta x}$

The characteristic impedance of any small T section is that of the line as a whole

$$Z_0 = \sqrt{Z_1 Z_2 \left(1 + \frac{Z_1}{4 Z_2}\right)}$$

Substituting the values of Z_1 and Z_2,

$$Z_0 = \sqrt{\frac{Z\ \Delta x}{Y\ \Delta x}\left(1 + \frac{Z\ \Delta x\ Y\ \Delta x}{4}\right)}$$

$$= \sqrt{\frac{Z}{Y}\left(1 + \frac{ZY\ (\Delta x)^2}{4}\right)}$$

If Δx tends to zero, then Z_0 becomes

$$Z_0 = \sqrt{\frac{Z}{Y}}$$

$$\sqrt{\frac{Z_1}{Z_2}\left(1+\frac{Z_1}{4Z_2}\right)} = \sqrt{\frac{Z_1}{Z_2}}\left(1+\frac{Z_1}{4Z_2}\right)^{\frac{1}{2}}$$

By the binomial theorem,

$$\sqrt{\frac{Z_1}{Z_2}\left(1+\frac{Z_1}{4Z_2}\right)} = \sqrt{\frac{Z_1}{Z_2}}\left[1+\frac{1}{2}\left(\frac{Z_1}{4Z_2}\right)-\frac{1}{8}\left(\frac{Z_1}{4Z_2}\right)^2+\ldots\ldots\right]$$

Substituting this value in e^{γ} equation,

$$e^{\gamma} = 1 + \frac{Z_1}{2Z_2} + \sqrt{\frac{Z_1}{Z_2}\left(1 + \frac{Z_1}{4Z_2}\right)}$$

$$= 1 + \frac{Z_1}{2Z_2} + \sqrt{\frac{Z_1}{Z_2}} + \frac{1}{8}\left(\frac{Z_1}{Z_2}\right)\sqrt{\frac{Z_1}{Z_2}} - \frac{1}{128}\left(\frac{Z_1}{Z_2}\right)^2\sqrt{\frac{Z_1}{Z_2}} + \ldots\ldots$$

$$= 1 + \sqrt{\frac{Z_1}{Z_2}} + \frac{1}{2}\left(\sqrt{\frac{Z_1}{Z_2}}\right)^2 + \frac{1}{8}\left(\sqrt{\frac{Z_1}{Z_2}}\right)^3 - \frac{1}{128}\left(\sqrt{\frac{Z_1}{Z_2}}\right)^5 + \ldots\ldots$$

When applied to the incremental length of line Δx, then $Z_1 = Z\,\Delta x$, $Z_2 = \frac{1}{Y\,\Delta x}$ and propagation constant becomes $\gamma\,\Delta x$,

$$e^{\gamma\Delta x} = 1 + \sqrt{ZY}\,\Delta x + \frac{1}{2}(\sqrt{ZY})^2(\Delta x)^2 + \frac{1}{8}(\sqrt{ZY})^3(\Delta x)^3 - \frac{1}{128}(\sqrt{ZY})^5(\Delta x)^5$$

Series expansion for an exponential $e^{\gamma \Delta x}$ is

$$e^{\gamma \Delta x} = 1 + \gamma \Delta x + \frac{\gamma^2 (\Delta x)^2}{2!} + \frac{\gamma^3 (\Delta x)^3}{3!} + \ldots\ldots\ldots$$

Equating the above two expressions,

$$\sqrt{ZY}\ \Delta x + \frac{(\sqrt{ZY})^2 (\Delta x)^2}{2} + \frac{(\sqrt{ZY})^3 (\Delta x)^3}{8} + \ldots$$

$$= \gamma \Delta x + \frac{\gamma^2 (\Delta x)^2}{2} + \frac{\gamma^3 (\Delta x)^3}{6} + \ldots$$

$$\gamma + \frac{\gamma^2 \Delta x}{2} + \frac{\gamma^3 (\Delta x)^2}{6} + \ldots\ldots$$

$$= \sqrt{ZY} + \frac{(\sqrt{ZY})^2}{2} \Delta x + \frac{(\sqrt{ZY})^3 (\Delta x)^2}{8} + \ldots\ldots$$

If Δx tends to zero then,

$$\gamma = \sqrt{ZY}$$

four parameters resistance (R), inductance (L), capacitance (C) and conductance (G), all distributed along the lines are known as distributed parameters. The equivalent circuit diagram of transmission line is shown in Fig.2.3.

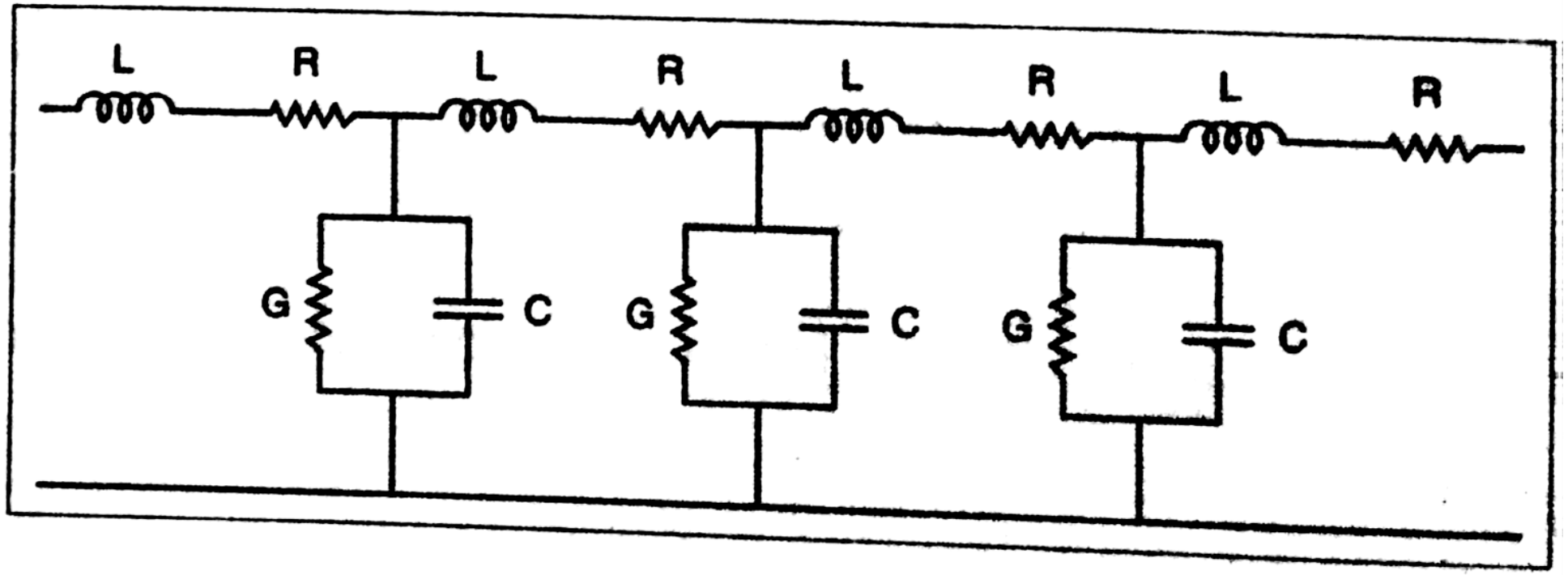

Fig. 2.3. Equivalent circuit diagram of transmission line

The four line parameters resistance (R), inductance (L), capacitance (C) and conductance (G) are also known as ***primary constants*** of the transmission line.

Resistance (R) is defined as the loop resistance per unit length of the transmission line. It is measured in ohms/km.

Inductance (L) is defined as the loop inductance per unit length of the transmission line. It is measured in Henries/km.

Capacitance (C) is defined as the shunt capacitance per unit length between the two transmission lines. It is measured in Farads/km.

Conductance (G) is defined as the shunt conductance per unit length between the two transmission lines. It is measured in mhos/km.

Transmission Line Equation – General Solution

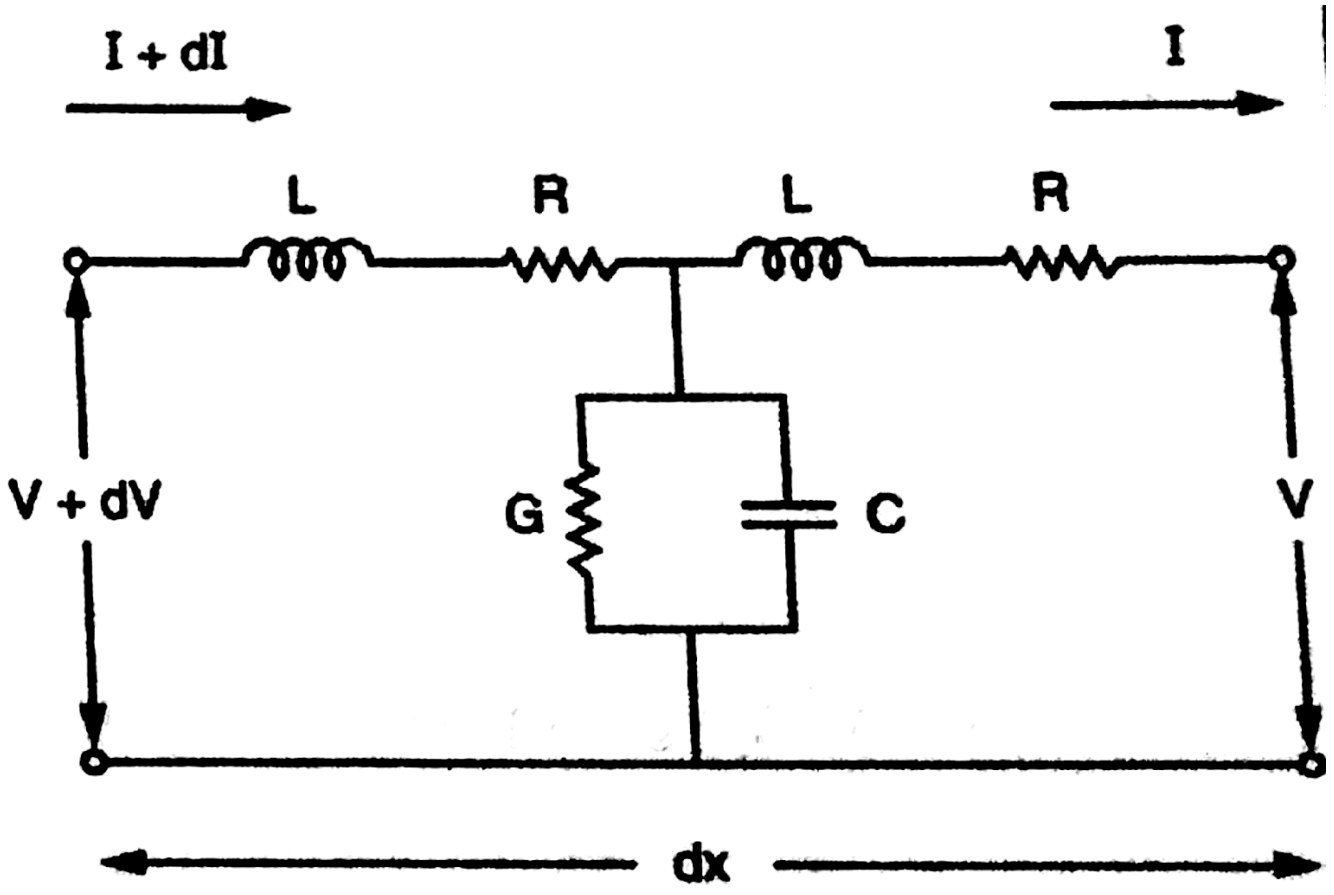

Equivalent circuit of T section of Transmission line

The parameters R, L, G and C are distributed throughout the transmission line. The constants of an incremental length dx of a line are shown in Fig.2.4. The series impedance per unit length and shunt admittance per unit length are given by

$$Z = R + j\omega L$$

$$Y = G + j\omega C$$

Consider a T section of transmission line of length dx.

Let $V + dV$ be the voltage

$I + dI$ be the current at one end of T section

Let V be the voltage and I be the current at the other end of this section

The series impedance of a small section dx is $(R + jL\omega)\, dx$

The shunt admittance of this section dx is $(G + jC\omega)\, dx$

The voltage drop across the series impedance of T sections *i.e.*, the potential difference between the two ends of T section is

$$V + dV - V = I(R + j\omega L)\,dx$$

$$dV = I(R + j\omega L)\,dx$$

$$\frac{dV}{dx} = I(R + j\omega L) \qquad \ldots (2.1)$$

$$\frac{dV}{dx} = IZ$$

The current difference between the two ends of T section is due to the voltage drop across the shunt admittance.

$$I + dI - I = V(G + j\omega C)\,dx$$

$$dI = V(G + j\omega C)\,dx$$

$$\frac{dI}{dx} = V(G + j\omega C) \qquad \ldots (2.2)$$

$$\frac{dI}{dx} = VY$$

Differentiating equation (2.1) w.r.t. 'x', $\frac{dV}{dx} = I(R + j\omega L)$

$$\frac{d^2V}{dx^2} = (R + j\omega L)\frac{dI}{dx}$$

Substituting the value of $\frac{dI}{dx}$ in the above equation

$$\frac{d^2V}{dx^2} = (R + j\omega L)(G + j\omega C)V \qquad \ldots (2.3)$$

Differentiating equation (2.2) w.r.t. 'x'

$$\frac{d^2I}{dx^2} = (G + j\omega C)\frac{dV}{dx}$$

Substituting the value of $\frac{dV}{dx}$ in the above equation

$$\frac{d^2I}{dx^2} = (R + j\omega L)(G + j\omega C)\,I \qquad \ldots (2.4)$$

But propagation constant is given by

$$\gamma = \sqrt{(R + j\omega L)(G + j\omega C)} = \sqrt{ZY}$$

Substituting the value of γ in equation (2.3) and (2.4),

$$\frac{d^2V}{dx^2} = \gamma^2 V$$

$$\frac{d^2I}{dx^2} = \gamma^2 I$$

The solutions of the above linear differential equations are

$$V = A e^{\gamma x} + B e^{-\gamma x} \qquad \ldots (2.5)$$

$$I = C e^{\gamma x} + D e^{-\gamma x} \qquad \ldots (2.6)$$

where A, B, C and D are arbitrary constants.

Differentiating the equation (2.5), w.r.t. 'x'

$$\frac{dV}{dx} = A\gamma e^{\gamma x} - B\gamma e^{-\gamma x}$$

But $\frac{dV}{dx} = IZ$

$$IZ = A\gamma e^{\gamma x} - B\gamma e^{-\gamma x}$$

$$= A\sqrt{ZY}\, e^{\sqrt{ZY}\,x} - B\sqrt{ZY}\, e^{-\sqrt{ZY}\,x} \qquad [\because \gamma = \sqrt{ZY}]$$

$$I = A\sqrt{\frac{Y}{Z}}\, e^{\sqrt{ZY}\,x} - B\sqrt{\frac{Y}{Z}}\, e^{-\sqrt{ZY}\,x} \qquad \ldots (2.7)$$

Similarly, differentiating the equation (2.6) w.r.t. 'x'

$$\frac{dI}{dx} = C\gamma\, e^{\gamma x} - D\gamma\, e^{-\gamma x}$$

$$\text{But } \frac{dI}{dx} = VY$$

$$VY = C\gamma\, e^{\gamma x} - D\gamma\, e^{-\gamma x}$$

$$= C\sqrt{ZY}\, e^{\sqrt{ZY}\,x} - D\sqrt{ZY}\, e^{-\sqrt{ZY}\,x}$$

$$V = C\sqrt{\frac{Z}{Y}}\, e^{\sqrt{ZY}\,x} - D\sqrt{\frac{Z}{Y}}\, e^{-\sqrt{ZY}\,x} \qquad \ldots (2.8)$$

Since the distance x is measured from the receiving end of the transmission line,

$$x = 0, \qquad \therefore \quad I = I_R$$

$$V = V_R$$

$$V_R = I_R Z_R$$

where I_R is the current in the receiving end of line

V_R is the voltage across the receiving end of the lines

Z_R is the impedance of receiving end

Substituting this condition in equations (2.5), (2.6), (2.7) and (2.8).

$$V_R = A + B \qquad \ldots (2.9)$$

$$I_R = C + D \qquad \ldots (2.10)$$

$$I_R = A\sqrt{\frac{Y}{Z}} - B\sqrt{\frac{Y}{Z}} \qquad \ldots (2.11)$$

$$V_R = C\sqrt{\frac{Z}{Y}} - D\sqrt{\frac{Z}{Y}} \qquad \ldots (2.12)$$

To solve these equations,

$$\text{Let } x = \sqrt{\frac{Z}{Y}} \quad \text{and} \quad \frac{1}{x} = \sqrt{\frac{Y}{Z}}$$

$$\text{Then } I_R = \frac{A}{x} - \frac{B}{x}$$

$$= \frac{1}{x}(A - B)$$

$$\text{But } I_R = C + D$$

$$C + D = \frac{1}{x}(A - B)$$

$$Cx + Dx = A - B$$

$$A - B = Cx + Dx \qquad \ldots (2.13)$$

Similarly, equation (2.12) becomes,

$$V_R = Cx - Dx$$

$$\text{But } V_R = A + B$$

$$A + B = Cx - Dx \qquad \ldots (2.14)$$

$$A - B = Cx + Dx \qquad \ldots (2.13)$$

Adding the equations (2.13) and (2.14),

$$2A = 2Cx$$

$$A = Cx$$

Similarly subtracting the equation (2.13) from equation (2.14),

$$2B = -2Dx$$

$$B = -Dx$$

Substituting the values of A and B in the following equations

$$V_R = A + B$$

$$= Cx - Dx$$

$$\text{But} \quad I_R = C + D$$

$$I_R x = Cx + Dx \qquad \ldots (2.15)$$

$$V_R = Cx - Dx \qquad \ldots (2.16)$$

Adding the equations (2.15) and (2.16),

$$2Cx = I_R x + V_R$$

$$C = \frac{I_R}{2} + \frac{V_R}{2x} \qquad \ldots (2.17)$$

$$x = \sqrt{\frac{Z}{Y}}$$

$$\therefore C = \frac{I_R}{2} + \frac{V_R}{2}\sqrt{\frac{Y}{Z}}$$

Subtracting the equations (2.15) and (2.16),

$$2Dx = I_R x - V_R$$

$$D = \frac{I_R}{2} - \frac{V_R}{2x}$$

$$\therefore D = \frac{I_R}{2} - \frac{V_R}{2}\sqrt{\frac{Y}{Z}} \qquad \ldots (2.18)$$

But $A = Cx$

$$A = \frac{I_R}{2}x + \frac{V_R}{2}$$

$$\therefore A = \frac{V_R}{2} + \frac{I_R}{2}\sqrt{\frac{Z}{Y}} \qquad \text{... (2.19)}$$

$$B = -Dx$$

$$B = -\frac{I_R}{2}x + \frac{V_R}{2}$$

$$\therefore B = \frac{V_R}{2} - \frac{I_R}{2}\sqrt{\frac{Z}{Y}} \qquad \text{... (2.20)}$$

The characteristic impedance is defined as

$$Z_o = \sqrt{\frac{Z}{Y}}$$

$$= \sqrt{\frac{R + j\omega L}{G + j\omega C}} \qquad \ldots (2.21)$$

Substituting the value of Z_o in equations (2.19), (2.20), (2.17) and (2.18),

$$A = \frac{V_R}{2} + \frac{I_R}{2}\sqrt{\frac{Z}{Y}}$$

$$A = \frac{V_R}{2} + \frac{V_R}{2\,Z_R} Z_o$$

$$A = \frac{V_R}{2}\left[1 + \frac{Z_o}{Z_R}\right] \qquad \ldots (2.22)$$

$$B = \frac{V_R}{2} - \frac{I_R}{2}\sqrt{\frac{Z}{Y}}$$

$$= \frac{V_R}{2} - \frac{V_R}{2 Z_R} Z_o$$

$$B = \frac{V_R}{2}\left[1 - \frac{Z_o}{Z_R}\right] \qquad \ldots (2.23)$$

$$C = \frac{I_R}{2} + \frac{V_R}{2}\sqrt{\frac{Y}{Z}}$$

$$= \frac{I_R}{2} + \frac{I_R Z_R}{2 Z_o} \qquad [\because V_R = I_R Z_R]$$

$$C = \frac{I_R}{2}\left[1 + \frac{Z_R}{Z_o}\right] \qquad \ldots (2.24)$$

$$D = \frac{I_R}{2} - \frac{V_R}{2}\sqrt{\frac{Y}{Z}}$$

$$= \frac{I_R}{2} - \frac{I_R Z_R}{2 Z_o}$$

$$D = \frac{I_R}{2}\left[1 - \frac{Z_R}{Z_o}\right] \qquad \ldots (2.25)$$

Substituting the values of A, B, C and D in equations (2.5) and (2.6), the solutions of the differential equations are

$$V = \frac{V_R}{2}\left(1 + \frac{Z_o}{Z_R}\right) e^{\sqrt{ZY}\,x} + \frac{V_R}{2}\left(1 - \frac{Z_o}{Z_R}\right) e^{-\sqrt{ZY}\,x} \qquad \ldots (2.26)$$

$$I = \frac{I_R}{2}\left(1 + \frac{Z_R}{Z_o}\right) e^{\sqrt{ZY}\,x} + \frac{I_R}{2}\left(1 - \frac{Z_R}{Z_o}\right) e^{-\sqrt{ZY}\,x} \qquad \ldots (2.27)$$

$$V = \frac{V_R}{2} e^{\sqrt{ZY}\,x} + \frac{V_R}{2}\frac{Z_o}{Z_R} e^{\sqrt{ZY}\,x} + \frac{V_R}{2} e^{-\sqrt{ZY}\,x} - \frac{V_R}{2}\frac{Z_o}{Z_R} e^{-\sqrt{ZY}\,x}$$

$$I = \frac{I_R}{2} e^{\sqrt{ZY}\,x} + \frac{I_R}{2}\frac{Z_R}{Z_o} e^{\sqrt{ZY}\,x} + \frac{I_R}{2} e^{-\sqrt{ZY}\,x} - \frac{I_R}{2}\frac{Z_R}{Z_o} e^{-\sqrt{ZY}\,x}$$

$$V = V_R\left(\frac{e^{\sqrt{ZY}\,x} + e^{-\sqrt{ZY}\,x}}{2}\right) + I_R Z_o\left(\frac{e^{\sqrt{ZY}\,x} - e^{-\sqrt{ZY}\,x}}{2}\right) \quad [\because V_R = I_R Z_R]$$

$$I = I_R\left(\frac{e^{\sqrt{ZY}\,x} + e^{-\sqrt{ZY}\,x}}{2}\right) + \frac{V_R}{Z_o}\left(\frac{e^{\sqrt{ZY}\,x} - e^{-\sqrt{ZY}\,x}}{2}\right) \quad \left[\because I_R = \frac{V_R}{Z_R}\right]$$

Then equations can be written in terms of hyperbolic functions.

$$V = V_R \cosh\sqrt{ZY}\;x + I_R Z_o \sinh\sqrt{ZY}\;x \qquad \ldots (2.30)$$

$$I = I_R \cosh\sqrt{ZY}\;x + \frac{V_R}{Z_o}\sinh\sqrt{ZY}\;x \qquad \ldots (2.31)$$

These are the equations for voltage and current of a transmission line at any distance 'x' from the receiving end of transmission line.

The equations for voltage and current at the sending send of a transmission line of length 'l' are given by

$$V_S = V_R \cosh\sqrt{ZY}\, l + \frac{V_R}{Z_R} Z_o \sinh\sqrt{ZY}\, l \qquad \left[\because I_R = \frac{V_R}{Z_R}\right]$$

$$I_S = I_R \cosh\sqrt{ZY}\, l + \frac{I_R Z_R}{Z_o} \sinh\sqrt{ZY}\, l \qquad [\because V_R = I_R Z_R]$$

$$V_S = V_R\left[\cosh\sqrt{ZY}\, l + \frac{Z_0}{Z_R} \sinh\sqrt{ZY}\, l\right] \qquad \ldots (2.32)$$

$$I_S = I_R\left[\cosh\sqrt{ZY}\, l + \frac{Z_R}{Z_0} \sinh\sqrt{ZY}\, l\right] \qquad \ldots (2.33)$$

Physical Significance of the Equation-Infinite Line

Input impedance:

The equations for voltage and current at the sending end of a transmission line of length 'l' are given by

$$V_S = V_R\left(\cosh\sqrt{ZY}\,l + \frac{Z_0}{Z_R}\sinh\sqrt{ZY}\,l\right) \quad \ldots (2.32)$$

$$I_S = I_R\left(\cosh\sqrt{ZY}\,l + \frac{Z_R}{Z_0}\sinh\sqrt{ZY}\,l\right) \quad \ldots (2.33)$$

The input impedance of the transmission line is,

$$Z_S = \frac{V_S}{I_S}$$

$$= \frac{V_R\left(\cosh\sqrt{ZY}\,l + \frac{Z_0}{Z_R}\sinh\sqrt{ZY}\,l\right)}{I_R\left(\cosh\sqrt{ZY}\,l + \frac{Z_R}{Z_0}\sinh\sqrt{ZY}\,l\right)}$$

$$= \frac{I_R Z_R\left(\cosh\sqrt{ZY}\,l + \frac{Z_0}{Z_R}\sinh\sqrt{ZY}\,l\right)}{I_R\left(\cosh\sqrt{ZY}\,l + \frac{Z_R}{Z_0}\sinh\sqrt{ZY}\,l\right)}$$

$$Z_S = \frac{Z_0\,(Z_R\cosh\sqrt{ZY}\,l + Z_0\sinh\sqrt{ZY}\,l)}{(Z_0\cosh\sqrt{ZY}\,l + Z_R\sinh\sqrt{ZY}\,l)} \qquad \ldots (2.34)$$

$$\text{Let } \sqrt{ZY} = \gamma$$

The input impedance of the line is

$$Z_S = Z_0 \left[\frac{Z_R \cosh \gamma l + Z_0 \sinh \gamma l}{Z_0 \cosh \gamma l + Z_R \sinh \gamma l} \right]$$

or

$$Z_S = Z_0 \left[\frac{Z_R + Z_0 \tanh \gamma l}{Z_0 + Z_R \tanh \gamma l} \right]$$

In a different form

$$V_S = \frac{V_R}{2} \left[\left(1 + \frac{Z_0}{Z_R} \right) e^{\sqrt{ZY}\, l} + \left(1 - \frac{Z_0}{Z_R} \right) e^{-\sqrt{ZY}\, l} \right] \quad \ldots (2.28)$$

$$I_S = \frac{I_R}{2} \left[\left(1 + \frac{Z_R}{Z_0} \right) e^{\sqrt{ZY}\, l} + \left(1 - \frac{Z_R}{Z_0} \right) e^{-\sqrt{ZY}\, l} \right] \quad \ldots (2.29)$$

$$V_S = \frac{V_R}{2}\left[\left(\frac{Z_R + Z_0}{Z_R}\right) e^{\sqrt{ZY}\,l} + \left(\frac{Z_R - Z_0}{Z_R}\right) e^{-\sqrt{ZY}\,l}\right]$$

$$I_S = \frac{I_R}{2}\left[\left(\frac{Z_R + Z_0}{Z_0}\right) e^{\sqrt{ZY}\,l} + \left(\frac{Z_0 - Z_R}{Z_0}\right) e^{-\sqrt{ZY}\,l}\right]$$

$$V_S = \left(\frac{V_R}{2}\right)\left(\frac{Z_R + Z_0}{Z_R}\right)\left[e^{\sqrt{ZY}\,l} + \left(\frac{Z_R - Z_0}{Z_R + Z_0}\right) e^{-\sqrt{ZY}\,l}\right] \quad \ldots (2.35)$$

$$I_S = \frac{I_R}{2}\left(\frac{Z_R + Z_0}{Z_0}\right)\left[e^{\sqrt{ZY}\,l} - \left(\frac{Z_R - Z_0}{Z_R + Z_0}\right) e^{-\sqrt{ZY}\,l}\right] \quad \ldots (2.36)$$

The input impedance of the transmission line is given by,

$$Z_S = \frac{V_S}{I_S} = Z_0 \left[\frac{e^{\sqrt{ZY}\,l} + \left(\frac{Z_R - Z_0}{Z_R + Z_0}\right) e^{-\sqrt{ZY}\,l}}{e^{\sqrt{ZY}\,l} - \left(\frac{Z_R - Z_0}{Z_R + Z_0}\right) e^{-\sqrt{ZY}\,l}} \right] \quad [\because V_R = I_R Z_R] \ldots (2.37)$$

Let $\sqrt{ZY} = \gamma$

$$Z_S = Z_0 \left[\frac{e^{\gamma l} + \left(\frac{Z_R - Z_0}{Z_R + Z_0}\right) e^{-\gamma l}}{e^{\gamma l} - \left(\frac{Z_R - Z_0}{Z_R + Z_0}\right) e^{-\gamma l}} \right] \quad \ldots (2.38)$$

If the line is terminated with its characteristic impedance *i.e.*, $Z_R = Z_0$, then the input impedance becomes equal to its characteristic impedance.

$$Z_S = Z_0$$

The input impedance of an infinite line is determined by letting $l \to \infty$

$$\therefore \quad Z_S = Z_0$$

$$\text{If} \quad K = \frac{Z_R - Z_0}{Z_R + Z_0},$$

$$Z_S = Z_0 \left[\frac{e^{\gamma l} + K e^{-\gamma l}}{e^{\gamma l} - K e^{-\gamma l}} \right]$$

Wavelength and Velocity of Propagation

The propagation constant (γ) and characteristic impedance (Z_0) are called secondary constants of a transmission line.

Propagation constant is usually a complex quantity

$$\gamma = \alpha + j\beta$$

where α is the attenuation constant.

β is the phase shift.

$$\gamma = \sqrt{ZY}$$

where $Z = R + j\omega L$

$$Y = G + j\omega C$$

The characteristic impedance of the transmission line is also a complex quantity.

$$Z_0 = \sqrt{\frac{Z}{Y}}$$

$$Z_0 = \sqrt{\frac{R + j\omega L}{G + j\omega C}}$$

Propagation constant is $\gamma = \alpha + i\beta$

$$= \sqrt{(R + j\omega L)(G + j\omega C)}$$

$$\alpha + i\beta = \sqrt{RG - \omega^2 LC + j\omega(LG + RC)}$$

Squaring on both sides,

$$(\alpha + j\beta)^2 = RG - \omega^2 LC + j\omega(LG + RC)$$

$$\alpha^2 - \beta^2 + 2j\,\alpha\beta = RG - \omega^2 LC + j\omega\,(LG + RC)$$

Equating real parts,

$$\alpha^2 - \beta^2 = RG - \omega^2 LC$$

$$\alpha^2 = \beta^2 + RG - \omega^2 LC$$

Equating imaginary parts,

$$2\,\alpha\beta = \omega\,(LG + RC)$$

Squaring on both sides,

$$4\,\alpha^2\,\beta^2 = \omega^2\,(LG + RC)^2$$

$$\alpha^2\,\beta^2 = \frac{\omega^2}{4}\,(LG + RC)^2$$

Substituting the value of α^2

$$(\beta^2 + RG - \omega^2 LC)\,\beta^2 = \frac{\omega^2}{4}\,(LG + RC)^2$$

$$\beta^4 + \beta^2 (RG - \omega^2 LC) - \frac{\omega^2}{4} (LG + RC)^2 = 0$$

The solution of the quadratic equation is

$$\beta^2 = \frac{-(RG - \omega^2 LC) \pm \sqrt{(RG - \omega^2 LC)^2 + \omega^2 (LG + RC)^2}}{2}$$

By neglecting the negative values,

$$\therefore \quad \beta = \sqrt{\frac{\omega^2 LC - RG + \sqrt{(RG - \omega^2 LC)^2 + \omega^2 (LG + RC)^2}}{2}}$$

$$\alpha^2 = \beta^2 + RG - \omega^2 LC$$

Substituting the value of β

$$\alpha^2 = \frac{\omega^2 LC - RG + \sqrt{(RG - \omega^2 LC)^2 + \omega^2 (LG + RC)^2}}{2} + RG - \omega^2 LC$$

$$= \frac{RG - \omega^2 LC + \sqrt{(RG - \omega^2 LC)^2 + \omega^2 (LG + RC)^2}}{2}$$

$$\therefore \alpha = \sqrt{\frac{RG - \omega^2 LC + \sqrt{(RG - \omega^2 LC)^2 + \omega^2 (LG + RC)^2}}{2}}$$

For a perfect transmission line $R = 0$ and $G = 0$,

$$\beta^2 = \omega^2 LC$$

$$\therefore \beta = \omega \sqrt{LC}$$

Velocity:

The velocity of propagation is given by,

$$v = \lambda f$$

$$= 2\pi f \frac{\lambda}{2\pi}$$

$$v = \frac{\omega}{\beta} \qquad [\because \beta = \frac{2\pi}{\lambda} \text{ and } \omega = 2\pi f]$$

Substituting the value of $\beta = \omega\sqrt{LC}$

$$\therefore \quad v = \frac{\omega}{\omega\sqrt{LC}}$$

$$v = \frac{1}{\sqrt{LC}}$$

This is the velocity of propagation for an ideal line.

Wavelength:

The distance travelled by the wave along the line while the phase angle is changing through 2π radians is called wavelength.

$$\beta\lambda = 2\pi$$

$$\lambda = \frac{2\pi}{\beta} \quad \text{or} \quad \lambda = \frac{v}{f}$$

Waveform Distortion

The received waveform will not be identical with the input waveform at the sending end

This variation is known as distortion

1. **Frequency Distortion**
2. **Delay or Phase Distortion**

Frequency Distortion: A complex (voice) voltage transmitted on a transmission line will not be attenuated equally and the received waveform will not be identical with the input waveform at the transmitting end. This variation is known as frequency distortion.

The attenuation constant is given by

$$\alpha = \sqrt{\frac{RG - \omega^2 LC + \sqrt{(RG - \omega^2 LC)^2 + \omega^2 (LG + CR)^2}}{2}}$$

- α is a function of frequency and therefore the line will introduce frequency distortion.

Delay or Phase Distortion: For an applied voice-voltage wave the received waveform may not be identical with the input waveform at the sending end, since some frequency components will be delayed more than those of other frequencies. This phenomenon is known as delay or phase distortion.

The phase constant is

$$\beta = \sqrt{\frac{\omega^2 LC - RG + \sqrt{(RG - \omega^2 LC)^2 + \omega^2 (LG + CR)^2}}{2}}$$

β is not a constant multiplied by ω and therefore the line will introduce delay distortion.

The Distortion Less Line

If a line is to have neither frequency nor delay distortion, then attenuation factor α and the velocity of propagation v cannot be functions of frequency.

If $$v = \frac{\omega}{\beta}$$

β must be a direct function of frequency

$$\beta = \sqrt{\frac{\omega^2 LC - RG + \sqrt{(RG - \omega^2 LC)^2 + \omega^2 (LG + CR)^2}}{2}}$$

For β to be a direct function of frequency, the term

$(RG - \omega^2 LC)^2 + \omega^2 (LG + CR)^2$ must be equal to $(RG + \omega^2 LC)^2$

$$R^2G^2 + \omega^4 L^2C^2 - 2\,\omega^2 LCRG + \omega^2 L^2 G^2 + \omega^2 C^2 R^2 + 2\,\omega^2 LCRG$$

$$= R^2G^2 + \omega^4 L^2 C^2 + 2\,\omega^2 LCRG$$

$$\omega^2 L^2 G^2 + \omega^2 C^2 R^2 = 2\,\omega^2 LCRG$$

$$\omega^2 L^2 G^2 + \omega^2 C^2 R^2 - 2\,\omega^2 LCRG = 0$$

$$(LG - CR)^2 = 0$$

$$LG = CR$$

$$\frac{R}{L} = \frac{G}{C}$$

This is the condition for distortionless line.

Propagation constant $\gamma = \sqrt{(R + j\omega L)(G + j\omega C)}$

$$= \sqrt{L\left(\frac{R}{L} + j\omega\right) C\left(\frac{G}{C} + j\omega\right)}$$

$$= \sqrt{LC}\sqrt{\left(\frac{R}{L} + j\omega\right)\left(\frac{G}{C} + j\omega\right)}$$

But $\frac{R}{L} = \frac{G}{C}$

$$\gamma = \sqrt{LC}\left(\frac{R}{L} + j\omega\right)$$

Then $\beta = \sqrt{\frac{\omega^2 LC - RG + RG + \omega^2 LC}{2}}$

$$= \sqrt{\frac{2\,\omega^2 LC}{2}}$$

$$\beta = \omega\sqrt{LC}$$

Velocity of propagation is $$v = \frac{\omega}{\beta}$$

$$v = \frac{1}{\sqrt{LC}}$$

This is the same velocity for all frequencies, thus eliminating delay distortion

Attenuation factor

$$\alpha = \sqrt{\frac{RG - \omega^2 LC + \sqrt{(RG - \omega^2 LC)^2 + \omega^2 (LG + CR)^2}}{2}}$$

To make α is independent of frequency, the term $(RG - \omega^2 LC)^2 + \omega^2 (LG + CR)^2$ is forced to be equal to $(RG + \omega^2 LC)^2$.

$$(LG - CR)^2 = 0$$

$$LG = CR$$

$$\frac{L}{C} = \frac{R}{G}$$

This will make α and the velocity independent of frequency simultaneously. To achieve this condition, it requires a very large value of L, since G is small.

The attenuation factor $\alpha = \sqrt{\dfrac{RG - \omega^2 LC + \sqrt{(RG + \omega^2 LC)^2}}{2}}$

$$= \sqrt{\frac{RG - \omega^2 LC + RG + \omega^2 LC}{2}}$$

$$= \sqrt{\frac{2\,RG}{2}}$$

$$\alpha = \sqrt{RG}$$

It is independent of frequency, thus eliminating frequency distortion on the line.

The characteristic impedance Z_o is given by

$$Z_o = \sqrt{\frac{R + j\omega L}{G + j\omega C}}$$

$$= \sqrt{\frac{L\left(\frac{R}{L} + j\omega\right)}{C\left(\frac{G}{C} + j\omega\right)}}$$

But $\frac{R}{L} = \frac{G}{C}$ for distortionless line.

$$\therefore \quad Z_o = \sqrt{\frac{L}{C}}$$

It is purely real and is independent of frequency

Loading of Lines

- To achieve distortion less condition → increase L/C ratio
- Increasing inductance by inserting inductances in series with the line is termed as loading such lines are called as loaded lines
- Lumped inductors → loading coils

Types of loading

(a) Lumped loading

(b) Continuous loading

(c) Patch loading

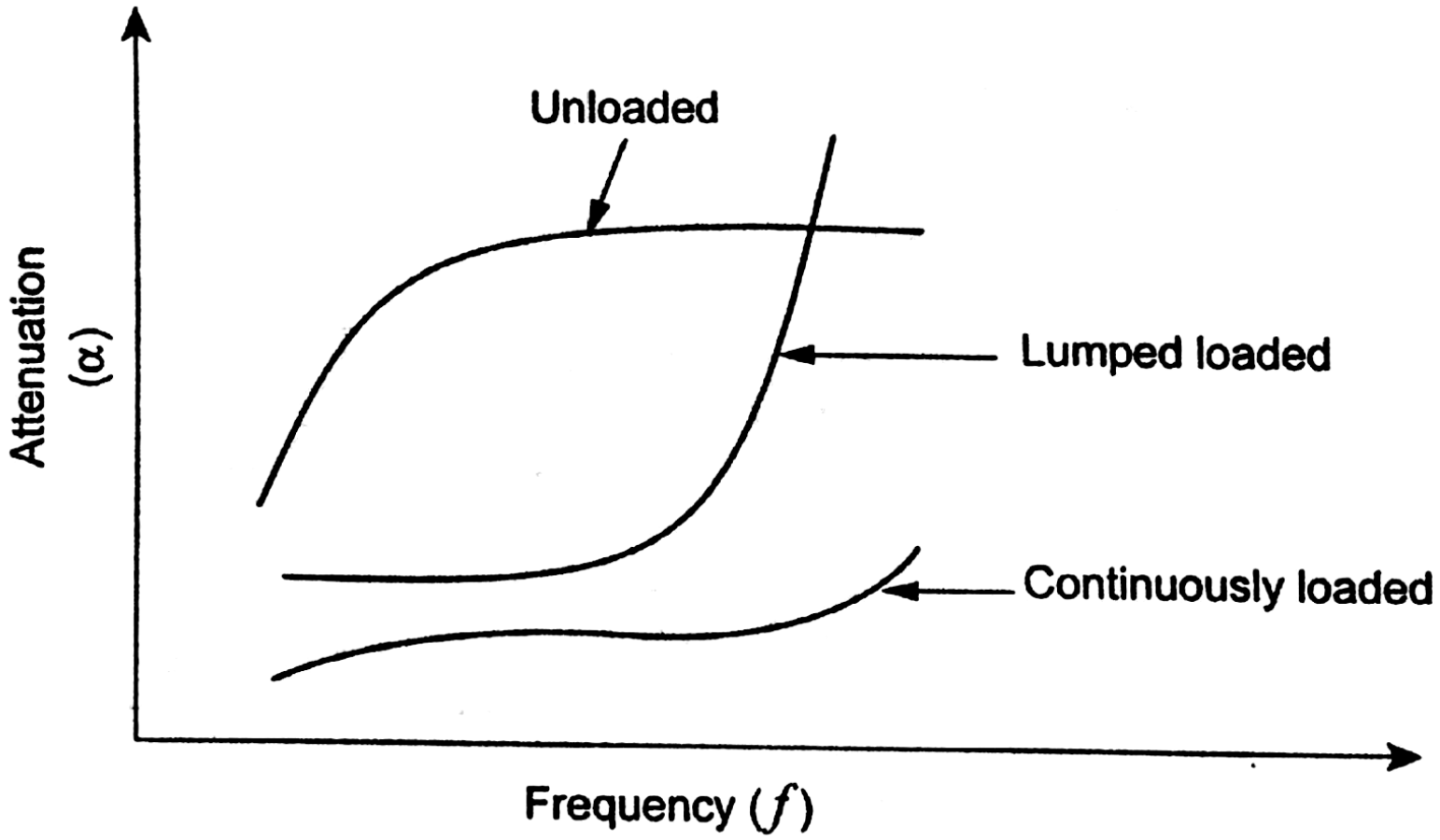

Comparison of loaded and unloaded cable characteristics

Inductance loading of Telephone cables

Consider an uniformly loaded cable with G = 0. Then,

$$Z = R + j\omega L$$

$$Y = j\omega C$$

$$Z = \sqrt{R^2 + (L\omega)^2} \angle \tan^{-1}\left(\frac{L\omega}{R}\right)$$

$$= \sqrt{R^2 + (L\omega)^2} \angle \frac{\pi}{2} - \tan^{-1}\frac{R}{L\omega}$$

Propagation constant $\gamma = \sqrt{ZY}$

$$= \sqrt{\sqrt{R^2 + (L\omega)^2} \angle \frac{\pi}{2} - \tan^{-1}\frac{R}{L\omega} \left(\omega C \angle \frac{\pi}{2}\right)}$$

$$= \sqrt{\omega C \sqrt{R^2 + (L\omega)^2} \angle \pi - \tan^{-1}\frac{R}{L\omega}}$$

$$= \sqrt{(\omega C)(L\omega)\sqrt{1 + \frac{R^2}{(L\omega)^2}}} \angle \frac{\pi}{2} - \frac{1}{2}\tan^{-1}\frac{R}{L\omega}$$

$$= \omega\sqrt{LC}\sqrt[4]{1 + \left(\frac{R}{L\omega}\right)^2} \angle \frac{\pi}{2} - \frac{1}{2}\tan^{-1}\frac{R}{L\omega}$$

Since R is small with respect to $L\omega$, the term $\left(\frac{R}{L\omega}\right)$ is neglected.

$$\therefore \gamma = \omega\sqrt{LC}\left[\frac{\pi}{2} - \frac{1}{2}\tan^{-1}\frac{R}{L\omega}\right]$$

$$\text{If } \theta = \frac{\pi}{2} - \frac{1}{2}\tan^{-1}\frac{R}{L\omega}$$

$$\cos\theta = \cos\left(\frac{\pi}{2} - \frac{1}{2}\tan^{-1}\frac{R}{L\omega}\right)$$

$$= \sin\left(\frac{1}{2}\tan^{-1}\frac{R}{L\omega}\right)$$

For small angle, $\sin\theta \approx \tan\theta \approx \theta$

so that $$\cos\theta = \frac{R}{2L\omega}$$

Similarly, $$\sin\theta = \sin\left(\frac{\pi}{2} - \frac{1}{2}\tan^{-1}\frac{R}{L\omega}\right) = 1$$

Propagation constant $$\gamma = \omega\sqrt{LC}\ (\cos\theta + j\sin\theta)$$

$$= \omega\sqrt{LC}\left(\frac{R}{2L\omega} + j\right)$$

$$\gamma = \frac{R\sqrt{LC}}{2L} + j\omega\sqrt{LC}$$

$$= \frac{R}{2}\sqrt{\frac{C}{L}} + j\omega\sqrt{LC}$$

$$\therefore \text{ Attenuation constant } \alpha = \frac{R}{2}\sqrt{\frac{C}{L}}$$

$$\text{Phase-shift } \beta = \omega\sqrt{LC}$$

$$\text{Velocity of propagation } v = \frac{\omega}{\beta} = \frac{1}{\sqrt{LC}}$$

Campbell's Equation

The series arm of T section including loading coil is given by

$$\frac{Z_1'}{2} = \frac{Z_c}{2} + \frac{Z_1}{2}$$

where $\frac{Z_1}{2}$ is the series arm of T section.

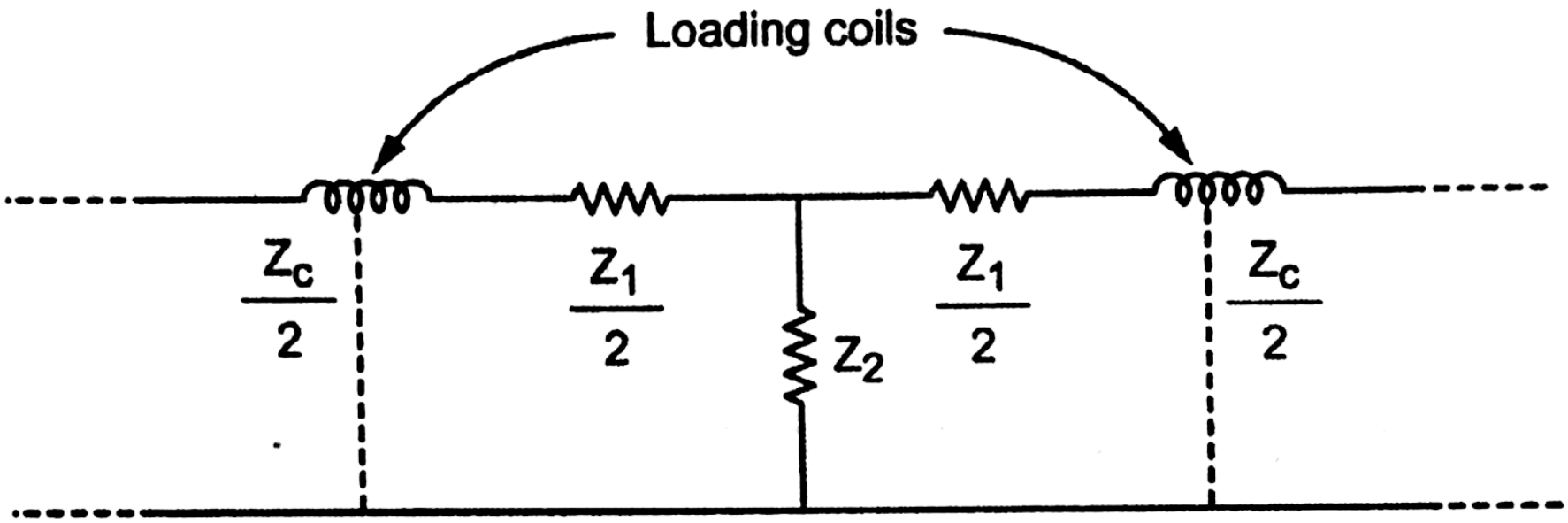

Equivalent T section for part of a line between two lumped loading coils

$$\frac{Z_1}{2} = Z_o \tanh \frac{\gamma l}{2}$$

$$\therefore \frac{Z_1'}{2} = \frac{Z_c}{2} + Z_o \tanh \frac{\gamma l}{2}$$

where l is the distance between two loading coils

The shunt arm Z_2 of the equivalent T section is

$$Z_2 = \frac{Z_o}{\sinh \gamma l}$$

For loaded T section

$$\cosh \gamma' l = 1 + \frac{Z_1'}{2 Z_2}$$

$$= 1 + \frac{\frac{Z_c}{2} + Z_o \tanh \frac{\gamma l}{2}}{\frac{Z_o}{\sinh \gamma l}}$$

$$\text{But } \tanh \frac{\gamma l}{2} = \frac{\cosh \gamma l - 1}{\sinh \gamma l}$$

Substituting this value in above equation

$$\therefore \cosh \gamma' l = 1 + \frac{\frac{Z_c}{2} + Z_o \frac{\cosh \gamma l - 1}{\sinh \gamma l}}{\frac{Z_o}{\sinh \gamma l}}$$

$$= 1 + \frac{\frac{Z_c}{2} \sinh \gamma l + Z_o (\cosh \gamma l - 1)}{Z_o}$$

$$= 1 + \frac{Z_c}{2 Z_o} \sinh \gamma l + \cosh \gamma l - 1$$

$$\cosh \gamma' l = \frac{Z_c}{2 Z_o} \sinh \gamma l + \cosh \gamma l$$

Reflection on a line not terminated in Z_o

When the load impedance is not equal to the characteristic impedance of a transmission line, reflection takes place, i.e., $Z_R \neq Z_0$, reflection occurs.

If a transmission line is not terminated in Z_0, then part of the wave is reflected back. The reflection is maximum when the line is open circuit or short circuit.

From the general solution of a transmission line, the equations for voltage and current are expressed as:

$$E = \frac{E_R(Z_R + Z_0)}{2Z_R}\left[e^{\gamma s} + \left(\frac{Z_R - Z_0}{Z_R + Z_0}\right)e^{-\gamma s}\right]$$

$$I = \frac{I_R(Z_R + Z_0)}{2Z_0}\left[e^{\gamma s} - \left(\frac{Z_R - Z_0}{Z_R + Z_0}\right)e^{-\gamma s}\right]$$

where $s \rightarrow$ is the distance measured from the receiving end.

The first component of E or I that varies exponentially with +s is called the incident wave which flows from the sending end to the receiving end

The second term, varying with $e^{-\gamma s}$, must represent a wave of voltage or current progressing from the receiving end towards the sending end is called reflected wave

In case of an infinite line (S = ∞) of for $Z_R = Z_o$ the second term of the equation becomes zero and the reflected wave is absent

When $Z_R = Z_o$, the waves travel smoothly down the line and the energy is absorbed in the Z_o load without setting up of a reflected wave. Such a line is called a smooth line

Incident voltage component is given by

$$E_1 = \frac{E_R(Z_R + Z_0)}{2Z_R} e^{\gamma s} = \frac{E_R\left(1 + \frac{Z_0}{Z_R}\right)}{2} e^{\gamma s}$$

Reflected voltage component is given by,

$$E_2 = \frac{E_R(Z_R - Z_0)}{2Z_R} e^{-\gamma s} = \frac{E_R\left(1 - \frac{Z_0}{Z_R}\right)}{2} e^{-\gamma s}$$

If $Z_R = \infty$ which represents an open circuited line,

$$E_1 = \frac{E_R}{2} e^{\gamma s} \ , \ E_2 = \frac{E_R}{2} e^{-\gamma s}$$

At $s = 0$, both E_1 and E_2 have an amplitude of $E_R/2$. Thus at the receiving end, initial value of the reflected wave is equal to incident voltage.

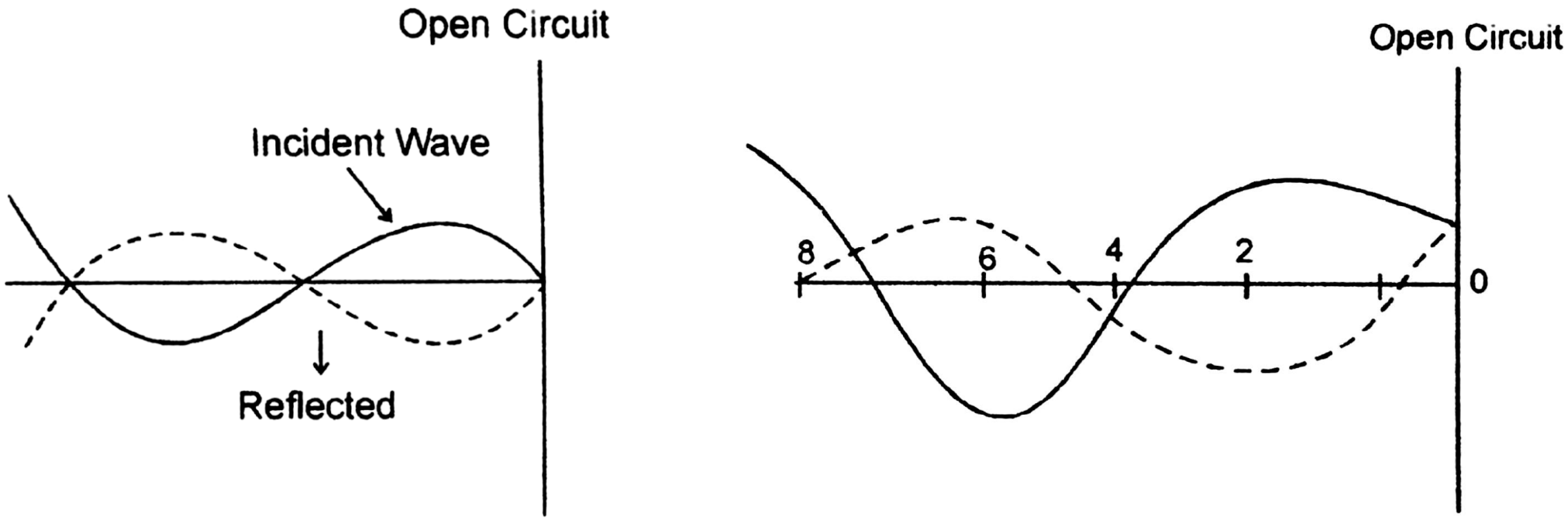

(i) For time instant t = 0 **(ii) For time instant t = 1/8 f**

Voltage waves for an open-circuited line

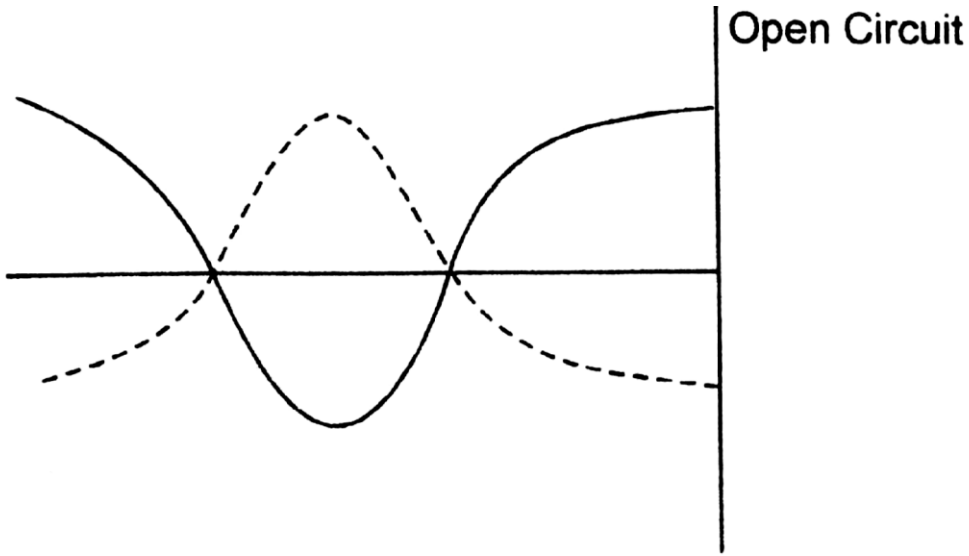

(iii) For time instant t = 2/8 f

Current waves for a open-circuited line

The two current waves are equal and of opposite phase:

$$I_1 = \frac{I_R}{2} e^{\gamma S} \quad \text{incident wave}$$

$$I_2 = -\frac{I_R}{2} e^{-\gamma S} \quad \text{reflected wave}$$

Reflection Phenomenon: The quantity actually transmitted along the line is energy. This energy is conveyed by the electric and magnetic fields traveling or guided along the line.

The energy conveyed in the electric field is

$$W_e = \frac{CE^2}{2} \text{ joules/m}^3$$

The energy conveyed in the magnetic field is

$$W_m = \frac{1}{2} LI^2 \text{ joules/m}^3$$

For such a line, $R << \omega L$, $G = 0$, $Z_0 = \sqrt{\frac{L}{C}}$

$$Z_0^2 = \frac{L}{C}$$

$$C = \frac{L}{Z_0^2}$$

$$E = IZ_0$$

$$W_e = \frac{CE^2}{2}$$

$$= \frac{1}{2}\frac{L}{Z_0^2} \cdot E^2$$

$$= \frac{1}{2} \cdot \frac{L}{Z_0^2} \cdot I^2 Z_0^2$$

$$\boxed{W_e = \frac{1}{2} LI^2 = W_m}$$

Thus $W_e = W_m$ at all the points along the ideal line terminated in Z_0 (or) the electric field energy equals the magnetic field energy.

Reflection coefficient

Reflection coefficient is defined as the ratio of the reflected voltage to the incident voltage at the receiving end of the line.

$$K = \frac{\text{Reflected voltage at load}}{\text{Incident voltage at load}} = \frac{V_R}{V_S}$$

The equation for the voltage of a transmission line is

$$V = \frac{V_R (Z_R + Z_o)}{2 Z_R} \left[e^{\gamma x} + \left(\frac{Z_R - Z_o}{Z_R + Z_o} \right) e^{-\gamma x} \right]$$

$$V = \frac{V_R (Z_R + Z_o)}{2 Z_R} e^{\gamma x} + \frac{V_R (Z_R - Z_o)}{2 Z_R} e^{-\gamma x}$$

The first term ($e^{\gamma x}$) represents incident wave, whereas the second term ($e^{-\gamma x}$) represents the reflected wave. The ratio of amplitude of the reflected wave voltage to the amplitude of the incident wave voltage is nothing but reflection coefficient.

$$K = \frac{\dfrac{V_R (Z_R - Z_o)}{2 Z_R}}{\dfrac{V_R (Z_R + Z_o)}{2 Z_R}} = \frac{Z_R - Z_o}{Z_R + Z_o}$$

$$\boxed{K = \frac{Z_R - Z_o}{Z_R + Z_o}}$$

It is also defined as in terms of the ratio of the reflected current to the incident current. But it is negative.

$$-K = \frac{\text{Reflected current at load}}{\text{Incident current at load}} = \frac{I_R}{I_S}$$

Reflection Factor and Reflection Loss

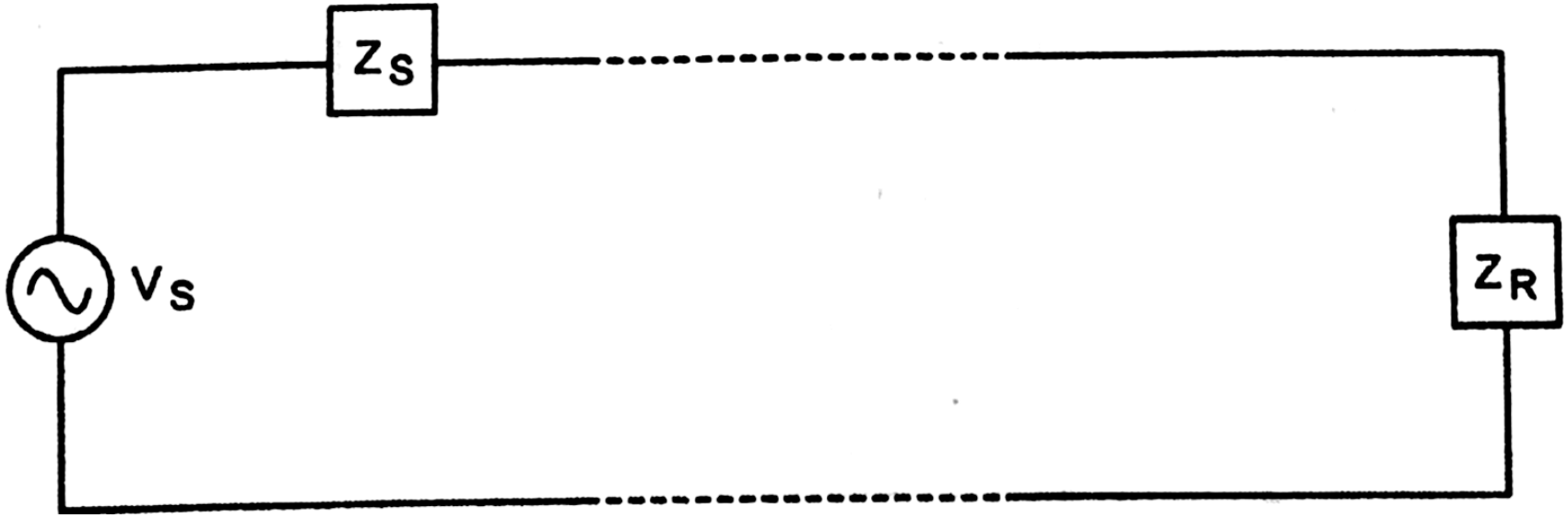

Transmission line with voltage source V_S and impedance Z_S

current ratio of the transformer is given by $$\frac{I_2}{I_1} = \sqrt{\frac{Z_S}{Z_R}}$$

The current through the source is

$$I_1 = \frac{V_S}{2 Z_S}$$

The current flow in the secondary of the transformer

$$I_2' = I_1 \sqrt{\frac{Z_S}{Z_R}}$$

$$= \frac{V}{2 Z_S} \sqrt{\frac{Z_S}{Z_R}}$$

$$= \frac{V_S}{2 \sqrt{Z_S Z_R}}$$

The current in the load impedance Z_2

$$|I_2| = \frac{|V_S|}{|Z_S + Z_R|}$$

The ratio of the current actually flowing in the load to that which might flow under matched condition is known as ***reflection factor.***

$$\left|\frac{I_2}{I_2'}\right| = \frac{\dfrac{|V_S|}{|Z_S + Z_R|}}{\dfrac{|V_S|}{|2\sqrt{Z_S Z_R}|}}$$

$$k = \left|\frac{2\sqrt{Z_S Z_R}}{Z_S + Z_R}\right|$$

The ***reflection loss*** is the reciprocal of the reflection factor in nepers or dB

$$\text{Reflection loss} = ln\,\frac{1}{k}$$

$$= ln\left|\frac{Z_S + Z_R}{2\sqrt{Z_S Z_R}}\right| \text{ nepers}$$

$$= 20\log\left|\frac{Z_S + Z_R}{2\sqrt{Z_S Z_R}}\right| \text{ dB}$$

Input Impedance and Transfer Impedance of Transmission Line

Input impedance :

The equations for voltage and current at the sending end of a transmission line of length 'l' are given by

$$V_S = V_R\left(\cosh\sqrt{ZY}\,l + \frac{Z_0}{Z_R}\sinh\sqrt{ZY}\,l\right)$$

$$I_S = I_R\left(\cosh\sqrt{ZY}\,l + \frac{Z_R}{Z_0}\sinh\sqrt{ZY}\,l\right)$$

The input impedance of the transmission line is,

$$Z_S = \frac{V_S}{I_S}$$

$$Z_S = \frac{V_R\left(\cosh\sqrt{ZY}\,l + \frac{Z_0}{Z_R}\sinh\sqrt{ZY}\,l\right)}{I_R\left(\cosh\sqrt{ZY}\,l + \frac{Z_R}{Z_0}\sinh\sqrt{ZY}\,l\right)}$$

$$= \frac{I_R Z_R\left(\cosh\sqrt{ZY}\,l + \frac{Z_0}{Z_R}\sinh\sqrt{ZY}\,l\right)}{I_R\left(\cosh\sqrt{ZY}\,l + \frac{Z_R}{Z_0}\sinh\sqrt{ZY}\,l\right)}$$

$$Z_S = \frac{Z_0\,(Z_R\cosh\sqrt{ZY}\,l + Z_0\sinh\sqrt{ZY}\,l)}{(Z_0\cosh\sqrt{ZY}\,l + Z_R\sinh\sqrt{ZY}\,l)}$$

Let $\sqrt{ZY} = \gamma$

The input impedance of the line is

$$Z_S = Z_0 \left[\frac{Z_R \cosh \gamma l + Z_0 \sinh \gamma l}{Z_0 \cosh \gamma l + Z_R \sinh \gamma l} \right]$$

$$Z_S = Z_0 \left[\frac{Z_R + Z_0 \tanh \gamma l}{Z_0 + Z_R \tanh \gamma l} \right]$$

In a different form

$$V_S = \frac{V_R}{2} \left[\left(1 + \frac{Z_0}{Z_R} \right) e^{\sqrt{ZY}\, l} + \left(1 - \frac{Z_0}{Z_R} \right) e^{-\sqrt{ZY}\, l} \right]$$

$$I_S = \frac{I_R}{2} \left[\left(1 + \frac{Z_R}{Z_0} \right) e^{\sqrt{ZY}\, l} + \left(1 - \frac{Z_R}{Z_0} \right) e^{-\sqrt{ZY}\, l} \right]$$

$$V_S = \frac{V_R}{2}\left[\left(\frac{Z_R + Z_0}{Z_R}\right) e^{\sqrt{ZY}\,l} + \left(\frac{Z_R - Z_0}{Z_R}\right) e^{-\sqrt{ZY}\,l}\right]$$

$$I_S = \frac{I_R}{2}\left[\left(\frac{Z_R + Z_0}{Z_0}\right) e^{\sqrt{ZY}\,l} + \left(\frac{Z_0 - Z_R}{Z_0}\right) e^{-\sqrt{ZY}\,l}\right]$$

$$V_S = \left(\frac{V_R}{2}\right)\left(\frac{Z_R + Z_0}{Z_R}\right)\left[e^{\sqrt{ZY}\,l} + \left(\frac{Z_R - Z_0}{Z_R + Z_0}\right) e^{-\sqrt{ZY}\,l}\right]$$

$$I_S = \frac{I_R}{2}\left(\frac{Z_R + Z_0}{Z_0}\right)\left[e^{\sqrt{ZY}\,l} - \left(\frac{Z_R - Z_0}{Z_R + Z_0'}\right) e^{-\sqrt{ZY}\,l}\right]$$

The input impedance of the transmission line is given by,

$$Z_S = \frac{V_S}{I_S} = Z_0\left[\frac{e^{\sqrt{ZY}\,l} + \left(\frac{Z_R - Z_0}{Z_R + Z_0}\right) e^{-\sqrt{ZY}\,l}}{e^{\sqrt{ZY}\,l} - \left(\frac{Z_R - Z_0}{Z_R + Z_0}\right) e^{-\sqrt{ZY}\,l}}\right] \qquad [\because V_R = I_R Z_R]$$

Let $\sqrt{ZY} = \gamma$

The input impedance of the transmission line is,

$$Z_S = Z_0 \left[\frac{e^{\gamma l} + \left(\frac{Z_R - Z_0}{Z_R + Z_0} \right) e^{-\gamma l}}{e^{\gamma l} - \left(\frac{Z_R - Z_0}{Z_R + Z_0} \right) e^{-\gamma l}} \right]$$

If the line is terminated with its characteristic impedance *i.e.*, $Z_R = Z_0$, then the input impedance becomes equal to its characteristic impedance.

$$Z_S = Z_0$$

The input impedance of an infinite line is determined by letting $l \to \infty$

$$\therefore \quad Z_S = Z_0$$

$$\text{If } K = \frac{Z_R - Z_0}{Z_R + Z_0}, \text{ then}$$

$$Z_S = Z_0 \left[\frac{e^{\gamma l} + K e^{-\gamma l}}{e^{\gamma l} - K e^{-\gamma l}} \right]$$

Transfer impedance :

the ratio of voltage at the sending end (transmitted voltage) to the current at the receiving end (received current).

$$Z_T = \frac{V_S}{I_R}$$

$$V_S = \frac{V_R (Z_R + Z_0)}{2 Z_R} (e^{\gamma l} + K e^{-\gamma l})$$

$$V_S = \frac{I_R (Z_R + Z_0)}{2} (e^{\gamma l} + K e^{-\gamma l}) \qquad [\because V_R = I_R Z_R]$$

$$Z_T = \frac{V_S}{I_R} = \frac{Z_R + Z_0}{2} (e^{\gamma l} + K e^{-\gamma l})$$

$$= \frac{Z_R + Z_0}{2} \left(e^{\gamma l} + \frac{Z_R - Z_0}{Z_R + Z_0} e^{-\gamma l} \right)$$

$$= \left(\frac{Z_R + Z_0}{2} \right) e^{\gamma l} + \left(\frac{Z_R - Z_0}{2} \right) e^{-\gamma l}$$

$$= Z_R \left(\frac{e^{\gamma l} + e^{-\gamma l}}{2} \right) + Z_0 \left(\frac{e^{\gamma l} - e^{-\gamma l}}{2} \right)$$

$$Z_T = Z_R \cosh \gamma l + Z_0 \sinh \gamma l$$

Open Circuited and Short Circuited Lines

The expressions for voltage and current at the sending end of a transmission line of length 'l' are given by

$$V_S = V_R\left[\cosh\sqrt{ZY}\,l + \frac{Z_o}{Z_R}\sinh\sqrt{ZY}\,l\right]$$

$$I_S = I_R\left[\cosh\sqrt{ZY}\,l + \frac{Z_R}{Z_o}\sinh\sqrt{ZY}\,l\right]$$

The input impedance of a transmission line is given by

$$Z_S = \frac{V_S}{I_S}$$

$$Z_S = \frac{V_R\left[\cosh\sqrt{ZY}\,l + \frac{Z_o}{Z_R}\sinh\sqrt{ZY}\,l\right]}{I_R\left[\cosh\sqrt{ZY}\,l + \frac{Z_R}{Z_o}\sinh\sqrt{ZY}\,l\right]}$$

$$= \frac{V_R}{I_R}\,\frac{Z_o}{Z_R}\,\frac{(Z_R\cosh\gamma l + Z_o\sinh\gamma l)}{(Z_o\cosh\gamma l + Z_R\sinh\gamma l)}$$

$$= Z_o\left(\frac{Z_R\cosh\gamma l + Z_o\sinh\gamma l}{Z_o\cosh\gamma l + Z_R\sinh\gamma l}\right) \qquad \left[\because Z_R = \frac{V_R}{I_R}\right]$$

$$Z_S = Z_o\left(\frac{Z_R\cosh\gamma l + Z_o\sinh\gamma l}{Z_o\cosh\gamma l + Z_R\sinh\gamma l}\right)$$

If short circuited, the receiving end impedance is zero.

$$i.e., \quad Z_R = 0$$

$$\therefore Z_{sc} = Z_o \left(\frac{Z_o \sinh \gamma l}{Z_o \cosh \gamma l} \right)$$

Short circuited impedance

$$Z_{sc} = Z_o \tanh \gamma l$$

If open circuited, the receiving end impedance is infinite.

i.e., $$Z_R = \infty$$

Input impedance of transmission line can be written as

$$Z_S = Z_o \left[\frac{\cosh \gamma l + \frac{Z_o}{Z_R} \sinh \gamma l}{\frac{Z_o}{Z_R} \cosh \gamma l + \sinh \gamma l} \right]$$

Applying $Z_R = \infty$

$$\text{Then} \quad Z_{oc} = Z_o \left[\frac{\cosh \gamma l}{\sinh \gamma l} \right]$$

The open circuited impedance

$$Z_{oc} = Z_o \coth \gamma l$$

By multiplying open circuited impedance and short circuited impedances

$$Z_{oc} Z_{sc} = Z_o^2 \tanh \gamma l \coth \gamma l$$

$$= Z_o^2$$

The characteristic impedance is given by

$$Z_o = \sqrt{Z_{oc} Z_{sc}}$$

By dividing short circuited impedance by open circuited impedance

$$\frac{Z_{sc}}{Z_{oc}} = \frac{Z_o \tanh \gamma l}{Z_o \coth \gamma l} = \tan^2 h\, \gamma l$$

$$\tanh \gamma l = \sqrt{\frac{Z_{sc}}{Z_{oc}}}$$

$$\gamma l = \tanh^{-1} \sqrt{\frac{Z_{sc}}{Z_{oc}}}$$

Problems

A lossless line has a characteristic impedance of 400 ohms. Determine the standing wave ratio of the receiving end impedance is 800 + j0.0 ohms. [Nov./Dec. 2010]

Given: $Z_0 = 400$ ohms, $Z_R = 800 + j0.0$ ohms

i) Reflection coefficient

$$k = \frac{Z_R - Z_0}{Z_R + Z_0} = \frac{800 - 400}{800 + 400} = \frac{400}{1200} = \frac{1}{3}$$

ii) Standing wave ratio

$$S = \frac{1+k}{1-k} = \frac{1+1/3}{1-1/3} = 2$$

A transmission line has the following unit length parameters. $L = 0.1\ \mu H$; $R = 5$ ohms, $G = 0.01$ mho, $C = 300$ PF. Calculate the characteristic impedance and propagation constant at 500 MHz. [November/December 2010]

Ans:

$R = 5$ ohms, $L = 0.1\ \mu H$, $C = 300$ PF, $G = 0.01$ mho

$f = 500$ MHz

$$Z = R + j\omega L = 5 + j(2\pi \times 500 \times 10^6)(0.1 \times 10^{-6})$$

$$Z = 5 + j314.15$$

$$= 314.199\underline{/89.088^\circ}$$

$$Y = G + j\omega C$$

$$= 0.01 + j(2\pi \times 500 \times 10^6 \times 300 \times 10^{-12})$$

$$Y = 0.01 + j\,0.9424$$

$$= 0.9425\underline{/89.39^\circ}$$

Characteristic impedance $Z_0 = \sqrt{\frac{Z}{Y}}$

$$= \sqrt{\frac{314.199\angle 89.088^o}{0.9425\angle 89.39^o}}$$

$$Z_0 = 18.281\underline{/-0.151^o}\ \Omega$$

Propagation constant $\gamma = \sqrt{ZY}$

$$= \sqrt{314.199\underline{/89.088} \times 0.9425\ \underline{/89.39^o}}$$

$$\gamma = 17.2085\underline{/89.239^o}$$

The characteristic impedance of a uniform transmission line is 2309.6 ohms at a frequency of 800 MHz. At this frequency the propagation constant is 0.054 (0.0366 + j0.99). Determine R and L. [November/December 2010]

Given: $Z_0 = 2309.6$ ohms, $f = 800 \times 10^6$ Hz

$$\gamma = 0.054\,(0.0366 + j0.99)$$

$$\omega = 2\pi f = 2\pi \times 800 \times 10^6$$

$$R + j\omega L = Z_0\,\gamma$$

$$= (2309.6)\,(0.054\,(0.0366 + j0.99))$$

$$R + j\omega L = 4.56 + j123.47$$

$$R = 4.56\ \Omega/\text{km}$$

$$j\omega L = j123.47$$

$$\omega L = 123.47$$

$$L = \frac{123.47}{2\pi \times 800 \times 10^6}$$

$$= 0.0245\ \mu\text{H/km}$$

Find the attenuation and phase shift constant of a wave propagating along the line whose propagation constant is $1.048 \times 10^{-4} \underline{/88.8^\circ}$. [November/December 2008]

$$\gamma = 1.048 \times 10^{-4} \underline{/88.8^\circ}$$

$$\gamma = \alpha + j\beta$$

$$= 2.19 \times 10^{-6} + j1.048 \times 10^{-4}$$

$$\alpha = 2.19 \times 10^{-6} \text{ Nepers/m}$$

$$\beta = 1.048 \times 10^{-4} \text{ radians/m}$$

A transmission line has $Z_0 = 745\angle -12^\circ\,\Omega$ and is terminated in $Z_R = 100\ \Omega$. Calculate the reflection loss in db?

[April/May 2011]

$$\text{Reflection Factor } k = \left|\frac{2\sqrt{Z_R Z_0}}{Z_R + Z_0}\right|$$

$$= \left|\frac{2\sqrt{745\times 100}}{745+100}\right|$$

$$= 0.645$$

$$\text{Reflection Loss} = 20\log\frac{1}{|k|}$$

$$= 20\log\frac{1}{0.645} = 3.7751\ \text{dB}$$

Calculate the characteristic impedance of a transmission line if the following measurements have been made on the line. $Z_{oc} = 550 \angle -60^{o}\ \Omega$ and $Z_{sc} = 500 \angle 30^{o}\Omega$.

[November/December 2007]

$$Z_0 = \sqrt{Z_{OC} \cdot Z_{SC}}$$

$$= \sqrt{500\angle -60^{o} \cdot 500\angle 30^{o}}$$

$$= 524.404 \angle -30^{o}$$

-15°

If the reflection coefficient of a line is $0.3\angle -66^\circ$. Calculate the standing wave ratio.

[May/June 2009]

Given: $K = 0.3 \angle -66^\circ$

$$= |K| \angle \phi$$

Standing wave ratio

$$S = SWR = \frac{1+|K|}{1-|K|}$$

$$= \frac{1+0.3}{1-0.3} = \frac{1.3}{0.7}$$

$$= 1.8571$$

A generator of 1 V, 1 KHz supplies power to a 100 km long line terminated in Z_0 and having following constants.

R = 10.4 Ω/km **L = 0.00367 H/km**

G = 0.8 × 10^{-6} mho/km **C = 0.00835 × 10^{-6} F/km**

Calculate Z_0, attenuation constant α, phase constant, voltage and power.

[Nov./Dec. 2006], [May/June 2005]

(i) The line constants

$$Z = R + j\omega L = 10.4 + j(2 \times 3.14 \times 10^3 \times 0.00367)$$

$$= 10.4 + j23.0 = 25.29 \angle 66^o$$

$$Y = G + j\omega C = 0.8 \times 10^{-6} + j(2 \times 3.14 \times 10^3 \times 0.00835 \times 10^{-6})$$

$$= 0.8 \times 10^{-6} + j52.5 \times 10^{-6}$$

$$= 52.6 \times 10^{-6} \angle 90^o$$

(ii) Characteristic Impedance Z_0

$$Z_0 = \sqrt{\frac{Z}{Y}} = \sqrt{\frac{25.2\angle 66^o}{52.6\times 10^{-6}\angle 90^o}} = 692\angle -12^o \text{ ohms}$$

(iii) Propagation constant γ

$$\gamma = \sqrt{ZY} = \sqrt{25.2\angle 66^o \times 52.6\times 10^{-6}\angle 90^o} = 0.03\angle\frac{66+90}{2}$$

$$\gamma = 0.0363\angle 78^o$$

$$\gamma = 0.007928 + j0.03553 = \alpha + j\beta$$

where α is the attenuation constant,

β is the phase constant.

$$\alpha = 0.007928 \text{ nepers/km}$$

$$\beta = 0.0355 \text{ rad/km}$$

(iv) Wavelength (λ)

$$\lambda = \frac{2\pi}{\beta} = \frac{2\pi}{0.03553} = 176.84 \simeq 177\,km$$

(v) Velocity of Propagation

$$v = \frac{\omega}{\beta} = \frac{2\pi \times 1 \times 10^3}{0.03553} = \frac{6280}{0.0355} = 177000 \text{ km/sec.}$$

(vi) Sending Current:

Since the line is terminated in Z_0, then $Z_s = Z_0$

$$I_s = \frac{E_s}{Z_0} = \frac{1\angle 0^o}{692\angle -12^o} = 0.00145\angle 12^o\,A$$

$$= 1.45 \times 10^{-3}\angle 12^o\,mA$$

(vii) Received Current

$$\frac{I_s}{I_R} = e^{\gamma l}$$

$$I_R = I_s e^{-\gamma l}$$

$$= I_s e^{-\alpha l} e^{-j\beta l}$$

$\alpha = 0.00755$ neper/km

$\beta = 0.0355$ rad/km

$l = 100$ km.

$$I_R = 0.00145\angle 12^o \times e^{-0.755} \times e^{-j0.0355\times 100}$$

$$= 0.00145\angle 12^o \times e^{-0.755} \times e^{-j3.55}$$

$e^{-j3.55}$ is equivalent to an angle of –3.55 radians or –203.8 deg.

[Radians into degrees $-3.55 \times \frac{180}{\pi} = -230.8$]

$$I_R = 0.00145 \angle 12^o \times e^{-0.755} \angle -203.8^o$$

$$= 0.00145 \angle 12^o \times 0.472 \angle -203.8^o$$

$$= 0.000685 \angle -191.8^o \text{ amperes}$$

(viii) Received voltage, $E_R = I_R \cdot Z_0$

$$E_R = 0.000685 \angle -191.8 \times 692 \angle -12^o$$

$$E_R = 0.474 \angle -203.8^o \text{ volts}$$

(ix) The received power is given by

$$P_R = E_R\, I_R \cos\theta$$

θ is the angle between E_R and I_R

$$\theta = 203.8^o - 191.8^o$$

$$\theta = 12^o$$

$$P_R = 0.474 \times 0.000685 \times \cos 12^o$$

$$= 318 \times 10^{-6} \text{ watts}$$

A generator of 1 volt,1000 cycles, supplies power to a 100 mile open wire line terminated in 200 ohms resistance. The line parameters are:

R = 10.4 ohms per mile

L = 0.00367 Henry per mile

G = 0.8 $\times$ 10^{-6} mho per mile

C = 0.00835 μf per mile

Calculate the Reflection coefficient, Input impedance, The i/p power, The o/p power, Transmission efficiency.

[April/May 2011], [May 2009], [Nov./Dec. 2009], [Nov. 2005]

Ans: The line constant are computed in the previous problem

$Z = 25.2 \angle 66^o$ ohms per mile.

$Y = 52.6 \times 10^{-6} \angle +90^o$ mho per mile.

$Z_0 = 692 \angle -12^o$ ohms

$\gamma = 0.0363 \angle 78^o$

$\alpha = 0.00755$ neper per mile.

$\beta = 0.0355$ radians per mile.

$\alpha l = 0.755$ neper

$\beta l = 3.55$ radians $= 203.8^o$

(i) The reflection coefficient K

$$K = \frac{Z_R - Z_0}{Z_R + Z_0} = \frac{200 - 692\angle -12^o}{200 + 692\angle -12^o}$$

$$K = \frac{200 + j0 - 676.87 + j143.87}{200 + j0 + 676.87 - j143.87}$$

$$= \frac{-476.87 + j143.87}{876.87 - j143.87}$$

$$K = \frac{498.09\angle 163.21}{888.59\angle -9.317} = 0.560\angle 172.8^o$$

(ii) The input impedence

$$Z_s = Z_0\left(\frac{e^{\gamma l} + Ke^{-\gamma l}}{e^{\gamma l} - Ke^{-\gamma l}}\right)$$

$$e^{\gamma l} = e^{\alpha l} \cdot e^{j\beta l} = e^{0.755} \angle 203.8^o = 2.12 \angle 203.8^o$$

$$e^{-\gamma l} = e^{-\alpha l} \cdot e^{-\beta l} = e^{-0.755} \angle -203.8^o = 0.472 \angle -203.8^o$$

$$Z_s = 692 \underline{/-12^o} \left[\frac{2.12\angle 203.8^o + 0.558\angle 172.8^o \times 0.472\angle -203.8^o}{2.12\angle 203.8^o - 0.558\angle 172.8^o \times 0.472\angle -203.8^o}\right]$$

$$= 692 \underline{/-12^o} \left(\frac{1.975\angle 210^o}{2.285\angle 198.5^o}\right)$$

$$= 692 \angle -12^o \times 0.865 \angle 11.5^o$$

$$\boxed{Z_s = 597 \angle 0.5^o}$$

(iii) The input current

$$I_s = \frac{E_s}{Z_s} = \frac{1.0}{597 \angle -0.5^o} = 0.00167 \angle +0.5^o \text{ amps}$$

(iv) The received current I_R

$$I_s = \frac{I_R (Z_R + Z_0)}{2Z_0} (e^{\gamma l} - Ke^{-\gamma l})$$

-161.6^o

$$0.00167\angle 0.5^o = \frac{I_R(888.59\angle -9.5^o)}{1384\angle -12^o}(2.285\angle 198.5^o)$$

$$I_R = \frac{2.31\angle -11.5^o}{2030\angle 189^o}$$ -171.1

$$I_R = 0.00113\angle -200.5^o \; amp$$

(v) The load voltage E_R

$160 \quad 154.6$

$$E_R = I_R Z_R = 0.00113\angle -200.5^o \times 200$$

$$= 0.226\angle -200.5^o V$$

159.6

(vi) The power delivered to the load

$$P_R = I_R^2 R$$

$$= 0.00113^2 \times 200$$

$$P_R = 0.000255 \text{ watt}$$

(vii) The power input to the line

$$P_s = E_s I_s \cos\theta$$

where θ is the angle between E_s and I_s

$$= 1.0 \times 0.00167 \cos 0.5^o$$

$$P_s = 0.00167 \text{ watt}$$

(viii) Efficiency of the transmission line

$$\eta = \frac{P_R}{P_S} \times 100\%$$

$$= \frac{0.000255}{0.00167} \times 100\%$$

$$\eta = 15.2\%$$

A transmission line has the following parameters per km.

$$R = 15\ \Omega,\ \ C = 15\ \mu F,\ \ L = 1\ mH,\ \ G = 1\ umho.$$

Find the additional inductance to give distortionless transmission. Calculate α and β for this inductance added transmission line. **[Nov./Dec. 2007]**

For the distortionless line,

$$RC = L'G$$

$$L' = \frac{RC}{G} = \frac{15 \times 15 \times 10^{-6}}{1 \times 10^{-6}} = 225\,H$$

So that additional inductance required is

$$225 - 1 \times 10^{-3} = 224.999\,H$$

For the loaded line:

$$\alpha = \frac{R}{2}\sqrt{\frac{C}{L'}} + \frac{G}{2}\sqrt{\frac{L'}{C}}$$

$$= \frac{15}{2}\sqrt{\frac{15\times10^{-6}}{225}} + \frac{1\times10^{-6}}{2}\sqrt{\frac{225}{15\times10^{-6}}}$$

$$\alpha = \mathbf{0.00387\ N/km}$$

$$\beta = \omega\sqrt{L'C}$$

$$\beta = 6.283\times10^{3}\sqrt{225\times15\times10^{-6}}$$

$$\beta = 365\ \text{rad/km}$$

A transmission line operating at 500 MHz has $Z_0 = 80\Omega$, $\alpha = 0.04$ Nepers/m, $\beta = 1.5$ rad/m. Find the line parameters series resistance ($R\Omega/m$), sereis inductance (L H/m), shunt conductance (G mho/m) and capacitance between conductors (C F/m). **[May/June 2007]**

$f = 500$ MHz, $Z_0 = 80\ \Omega$, $\alpha = 0.04$ Nepers/m, $\beta = 1.5$ rad/m

The series impedance of a line is given by

$$Z = R + j\omega L = Z_0\,\gamma$$

$$\gamma = \alpha + j\beta = 0.04 + j1.5 = 1.5\ \angle 88.5^\circ$$

$$R + j\omega L = Z_0\gamma = 80\ \angle 0^\circ \times 1.5\ \angle 88.5^\circ$$

$$= 120\ \angle 88.5^\circ$$

$$R + j\omega L = 3.14 + j119.96.$$

Equating real and imaginary parts,

$$\boxed{R = 3.14\Omega}$$

$$\omega L = 119.96$$

$$L = \frac{119.96}{\omega} = \frac{119.96}{2\pi 500 \times 10^6} = \frac{119.96}{3142 \times 10^6}$$

$$\boxed{L = 38.12 \times 10^{-9} \text{ H/m.}}$$

The shunt admittance of a line is given by,

$$Y = G + j\omega C = \frac{\gamma}{Z_0}$$

$$= \frac{1.5\angle 88.5^o}{80\angle 0^o}$$

$$= 0.01875\angle 88.5^o$$

$$G + j\omega C = 4.9\times 10^{-4} + j0.01874$$

Equating real and imaginary parts,

$$\boxed{G = 0.49\times 10^{-3}\ mho/m}$$

$$\omega C = 0.01874$$

$$C = \frac{0.01874}{\omega} = \frac{0.01874}{3142\times 10^6}$$

$$\boxed{C = 5.96\times 10^{-12}\ F/m.}$$

UNIT II
HIGH FREQUENCY TRANSMISSION LINES

Transmission line equations at radio frequencies - Line of Zero dissipation - Voltage and current on the dissipation-less line, Standing Waves, Nodes, Standing Wave Ratio - Input impedance of the dissipation-less line - Open and short circuited lines - Power and impedance measurement on lines - Reflection losses - Measurement of VSWR and wavelength

Introduction

- When a line, either open-wire or coaxial, is used at frequencies of a Mega Hertz or more, certain approximations may be employed leading to simplified analysis of line performance

The assumptions are usually made are:

1. At very high frequency, the skin effect is very considerable so that currents may be assumed as flowing on conductor surfaces, internal inductance then being zero
2. Due to skin effect, resistance R increases with $\sqrt{f}$. But the line reactance ωL increases directly with frequency f. hence $\omega L \gg R$
3. The lines are well enough constructed that G may be considered Zero

Skin effect:

Skin effect is the tendency of an alternating current(AC) to become distributed within a conductor such that the current density is largest near the surface of the conductor, and decreases with greater depths in the conductor

Parameters of the open wire line at high frequencies

Due to skin effect the current is considered as flowing essentially on the surface of the conductor in a skin of very small depth. Hence the internal inductance and internal flux are reduced nearly to zero.

The inductance of an open wire line is given by,

$$L = 10^{-7}\left(\frac{\mu}{\mu_V} + 4\ln\frac{d}{a}\right)$$

The first term on the right hand side of the above expression represents internal inductance of the line due to internal flux linkages in the conductors and is zero for a open wire line.

Hence the inductance of the open wire line is

$$L = 4 \times 10^{-7} \ln \frac{d}{a} \text{ henrys/m}$$

$$= 9.21 \times 10^{-7} \log_{10} \frac{d}{a} \text{ henrys/m}$$

$a \rightarrow$ radius of conductor

$d \rightarrow$ distance between conductors

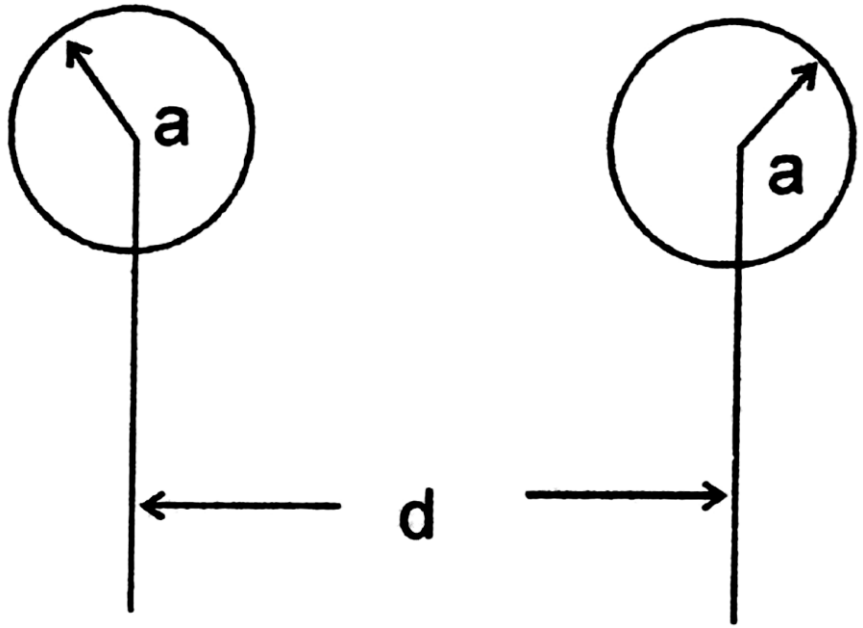

Cross section of parallel wires

The value of capacitance of a line is not affected by skin effect or frequency and hence the capacitance of a open wire line with air dielectric is given by,

$$C = \frac{\pi \varepsilon_v \varepsilon_r}{\ln \frac{d}{a}} \text{ farads/m}$$

where ε_v = Permittivity of free space = 8.85×10^{-12} f/m,

$\varepsilon_r = 1$ for air

$$C = \frac{27.7}{\ln \frac{d}{a}} \ \mu\mu\text{f/m}$$

$$C = \frac{12.07}{\log_{10} \frac{d}{a}} \ \mu\mu f/m$$

The effective thickness of the surface layer of current is given by,

$$\delta = \frac{1}{\sqrt{\pi f \mu \sigma}} \text{ meters}$$

where μ = conductor permeability = $4\pi \times 10^{-7}$ henry/m for copper.

σ = conductivity of conductor = 5.75×10^{7} mho/m for copper.

The effective thickness is then given by,

$$\delta = \frac{0.0664}{\sqrt{f}} \text{ (for Copper).}$$

The resistance of a round conductor of radius `a' meters to direct current is inversely proportional to the area as,

$$R_{dc} = \frac{k}{\pi a^2}$$

$$\text{where } R = \frac{\rho l}{A} = \frac{k}{A} = \frac{k}{\pi a^2}$$

While that of a round conductor with alternating current flowing in a skin of thickness δ is,

$$R_{ac} = \frac{k}{2\pi a \delta}$$

Therefore the ratio of resistance to alternating current to resistance to direct current is given by,

$$\frac{R_{ac}}{R_{dc}} = \frac{a\sqrt{\pi f \mu \sigma}}{2} = \frac{a}{2\delta}$$

For copper

$$\frac{R_{ac}}{R_{dc}} = 7.53\, a\sqrt{f}$$

From the above equation it is clear that for the large radius conductors, increase in resistance with increasing frequency is considerably large as compared to that of the conductor of small radius.

PARAMETERS OF THE COAXIAL LINE AT HIGH FREQUENCIES

Because of the skin effect, the current flows on the outer surface of the inner conductor and the inner surface of the outer conductor.

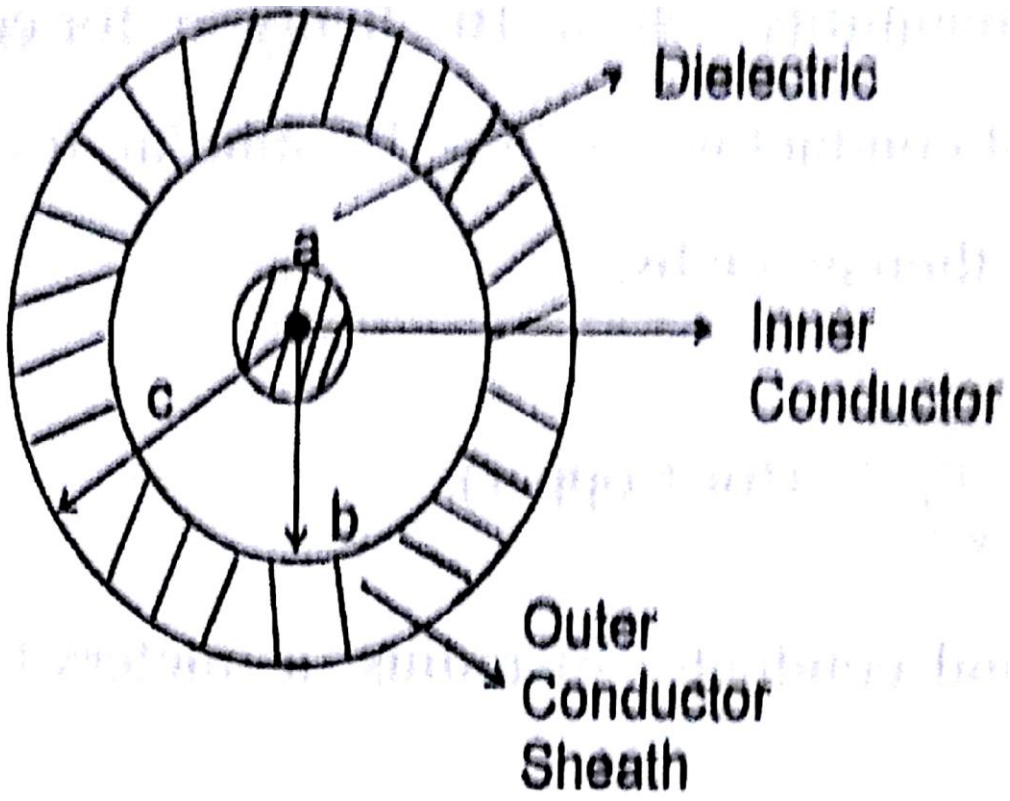

Cross Section of a coaxial cable

For a coaxial line the inductance is given by,

$$L = 10^{-7}\left[2\ln\frac{b}{a} + \frac{2C^4 \ln\frac{c}{b}}{(C^2-b^2)^2} - \frac{C^2}{C^2-b^2}\right] H/m$$

second term and third term represents flux linkages inside the inner and outer conductors.

The skin effect eliminates flux linkages and hence the inductance of coaxial line is given by,

$$L = 2 \times 10^{-7} \ln \frac{b}{a} \text{ henrys/m}$$

$$L = 4.6 \times 10^{-7} \log_{10} \frac{b}{a} \text{ henrys/m}$$

The capacitance of the coaxial line is not affected by the frequency.

$$C = \frac{2\pi\varepsilon}{\ln\frac{b}{a}} \text{ farads/m}$$

$$= \frac{2\pi\varepsilon_o\varepsilon_r}{\ln\frac{b}{a}} \text{ farads/m}, \qquad \varepsilon_0 = 8.854 \times 10^{-12} \text{ f/m}$$

$$C = \frac{55.5\varepsilon_r}{\ln\frac{b}{a}} \ \mu\mu\text{f/m}$$

$$C = \frac{24.14\,\varepsilon_r}{\log_{10}\frac{b}{a}}\ \mu\mu f/m$$

Due to skin effect resistance increases and the resistance of coaxial copper line is:

$$R_{ac} = 4.16 \times 10^{-8}\sqrt{f}\left[\frac{1}{b}+\frac{1}{a}\right]\Omega/m$$

where a and b are the outer radius of the inner conductor and inner radius of the outer conductor in meters respectively.

The ac resistance of the coaxial cable is derived as follows,

$$R_{ac} = \frac{1}{2\pi a\,\delta\sigma}+\frac{1}{2\pi b\,\delta\sigma} = \frac{1}{2\pi\,\delta\sigma}\left[\frac{1}{a}+\frac{1}{b}\right]$$

The ac resistance per unit length of a copper conductor is given by,

$$R_{ac} = \frac{1}{2\pi\left(\frac{0.0664}{\sqrt{f}}\right)\left(5.75\times10^{7}\right)}\left[\frac{1}{a}+\frac{1}{b}\right]$$

$$R_{ac} = 4.16 \times 10^{-8}\sqrt{f}\left[\frac{1}{a}+\frac{1}{b}\right]\Omega/m$$

The dc resistance of a coaxial line is given by,

$$R_{dc} = \frac{1}{\pi\sigma}\left[\frac{1}{a^2}+\frac{1}{(c^2-b^2)}\right]\ \Omega/\text{m}$$

$c \rightarrow$ outer radius outer conductor.

Line constants for zero dissipation

In general the line constants for a transmission line are:

$$Z = R + j\omega L$$

$$Y = G + j\omega C$$

Characteristic impedance $Z_0 = \sqrt{\frac{Z}{Y}} = \sqrt{\frac{R + j\omega L}{G + j\omega C}}$

Propagation constant $\gamma = \sqrt{ZY} = \sqrt{(R + j\omega L)(G + j\omega C)}$

$$\gamma = \alpha + j\beta.$$

For a transmission of energy at high frequencies, $\omega L >> R$

$G = 0$

$$Z = j\omega L, \quad Y = j\omega C$$

Since $\omega L >> R, G = 0$

$$Z_0 = \sqrt{\frac{Z}{Y}} = \sqrt{\frac{j\omega L}{j\omega C}} = \sqrt{\frac{L}{C}} \text{ ohms}$$

$$Z_0 = R_0 = \sqrt{\frac{L}{C}} \text{ ohms}$$

Using the inductance and capacitance a **open wire line at high frequency**, the value of characteristic impedance of the open wire line can be found as,

$$L = 4 \times 10^{-7} \ln \frac{d}{a} \text{ h/m} \qquad C = \frac{27.7}{\ln d/a} \ \mu\mu\text{f/m}$$

$$R_0 = \sqrt{\frac{L}{C}} = 120 \ln \frac{d}{a} \text{ ohms} = 276 \log_{10} \frac{d}{a} \text{ ohms}$$

The characteristic impedance of the coaxial line can be computed as,

$$L = 4.60 \times 10^{-7} \log_{10} b/a \text{ h/m}$$

$$C = \frac{24.14\varepsilon_r}{\log_{10} b/a} \ \mu\mu\text{F/m}$$

$$R_0 = \sqrt{\frac{L}{C}} = \frac{138}{\sqrt{\varepsilon_r}} \log_{10} b/a \text{ ohms}$$

$$L = 2 \times 10^{-7} \ln b/a \text{ h/m}$$

$$C = \frac{55.5\varepsilon_r}{\ln b/a} \ \mu\mu\text{f/m}$$

$$R_0 = \sqrt{\frac{L}{C}} = \frac{60}{\sqrt{\varepsilon_r}} \ln \frac{b}{a} \text{ ohms}$$

$\varepsilon_r = 1$ for air spaced lines

The propagation contant is given by,

$$\gamma = \sqrt{ZY} = \sqrt{(+j\omega L)(j\omega C)} = \sqrt{j^2\omega^2 LC} = j\omega\sqrt{LC}$$

$$\gamma = \alpha + j\beta = j\omega\sqrt{LC}$$

from which $\alpha = 0,\ \beta = \omega\sqrt{LC}$ radians/m

The velocity of propagation can be calculated as

$$V = \frac{\omega}{\beta} = \frac{\omega}{\omega\sqrt{LC}} = \frac{1}{\sqrt{LC}} \text{ m/sec}$$

Using the values of L and C for a open wire line.

$V = 3 \times 10^8$ m/sec $\Rightarrow$ Velocity of open wire line is same as the velocity of light is space.

For a coaxial cable, using the values of L and C,

$$V = \frac{3\times10^8}{\sqrt{\varepsilon_r}} \text{ m/sec} \Rightarrow$$ Velocity may be reduced due to the presence of a dielectric other than air between the conductors.

Voltages and Currents on the Dissipation less Line

The voltage at any point distant s units from the receiving end of a transmission line is,

$$E = \frac{E_R(Z_R + Z_0)}{2Z_R}\left(e^{\gamma s} + K\, e^{-\gamma s}\right)$$

For the line of zero dissipation, the attenuation constant α is zero and $Z_0 = R_0$

$$E = \frac{E_R(Z_R + Z_0)}{2Z_R}\left(e^{j\beta s} + K\, e^{-j\beta s}\right)$$

$e^{j\beta s} \rightarrow$ wave progressing from the source towards the load

$e^{-j\beta s} \rightarrow$ reflected wave moving from the load back towards the source

R_0

$$E = \frac{E_R}{2Z_R}\left[(Z_R + R_0)e^{j\beta s} + \left(\frac{Z_R - Z_0}{Z_R + Z_0}\right)(Z_R + Z_0)e^{-j\beta s}\right] \qquad \therefore Z_0 = R_0$$

$$= \frac{E_R}{2Z_R}\left[Z_R(e^{j\beta s} + e^{-j\beta s}) + R_0[e^{j\beta s} - e^{-j\beta s}]\right]$$

$$= \frac{E_R}{Z_R}\left[Z_R\frac{(e^{j\beta s} + e^{-j\beta s})}{2} + jR_0\frac{(e^{j\beta s} - e^{-j\beta s})}{2j}\right]$$

$$\boxed{E = E_R\cos\beta s + jI_R R_0\sin\beta s}$$

where $I_R = \dfrac{E_R}{Z_R}$

Similarly for the current on the line

$$I = \frac{I_R(Z_R + Z_0)}{2Z_0}\left(e^{j\beta s} - K\, e^{-j\beta s}\right)$$

The current at any point on a dissipationless line is given by

$$I = \frac{I_R}{2R_0}(Z_R + R_0)\left[e^{j\beta s} - \left(\frac{Z_R - R_0}{Z_R + R_0}\right)e^{-j\beta s}\right] \qquad \because Z_0 = R_0,\ K = \frac{Z_R - Z_o}{Z_R + Z_o}$$

$$= \frac{I_R}{R_0}\left[jZ_R\frac{(e^{j\beta s} - e^{-j\beta s})}{2j} + R_0\frac{(e^{j\beta s} + e^{-j\beta s})}{2}\right]$$

$$\boxed{I = I_R \cos \beta s + j \frac{E_R}{R_0} \sin \beta s}$$

where $E_R = I_R \cdot Z_R$

From velocity of propagation equation,

$$V = \frac{\omega}{\beta} \Rightarrow \beta = \frac{2\pi f}{V} \qquad \lambda = \frac{2\pi}{\beta} \text{ (or) } \beta = \frac{2\pi}{\lambda}$$

$$E = E_R \cos \frac{2\pi s}{\lambda} + j\, I_R R_o \sin \frac{2\pi s}{\lambda}$$

$$I = I_R \cos \frac{2\pi s}{\lambda} + \frac{j E_R}{R_0} \sin \frac{2\pi s}{\lambda}$$

Let us consider different conditions at the receiving end

(1) **When the line is open circuited**, then $I_R = 0$. Then the expression for voltage and current at a poin distance 's' from the receiving end is given by,

$$E_{OC} = E_R \cos \frac{2\pi s}{\lambda} \quad , \quad I_{OC} = \frac{j E_R}{R_0} \sin \frac{2\pi s}{\lambda}$$

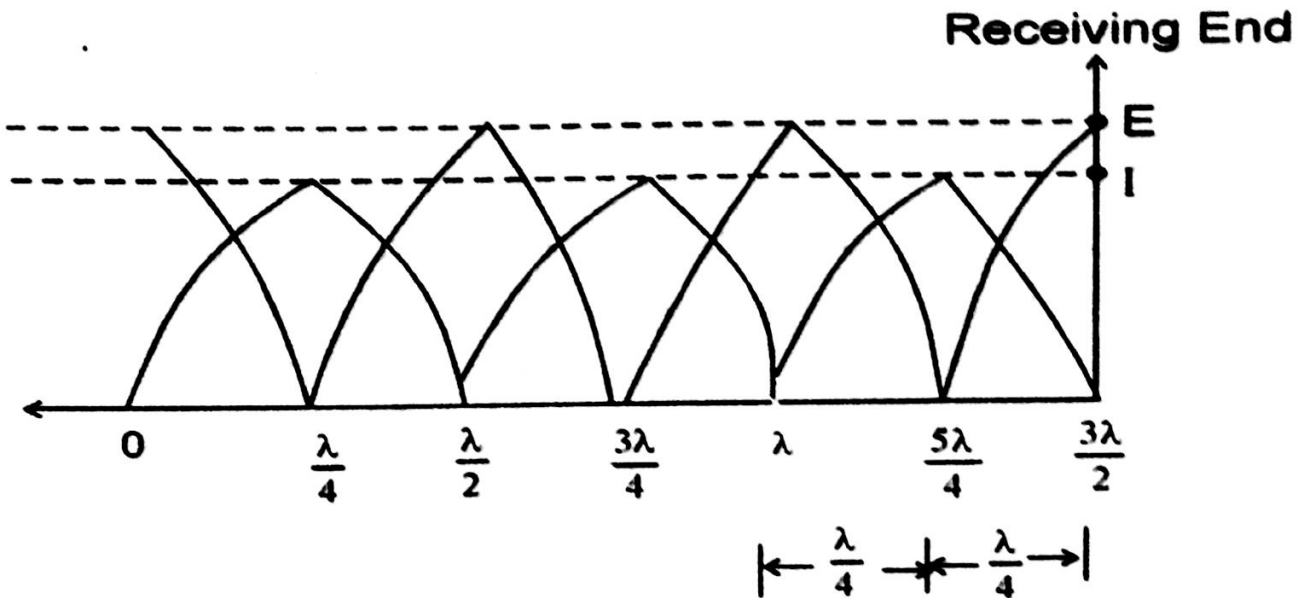

Open circuited line $R_0 = \infty$

(2) **If the line is short circuited at the receiving end then** $E_R = 0$

$$E_{SC} = j\, I_R\, R_o \sin \frac{2\pi s}{\lambda}$$

$$I_{SC} = I_R \cos \frac{2\pi s}{\lambda}$$

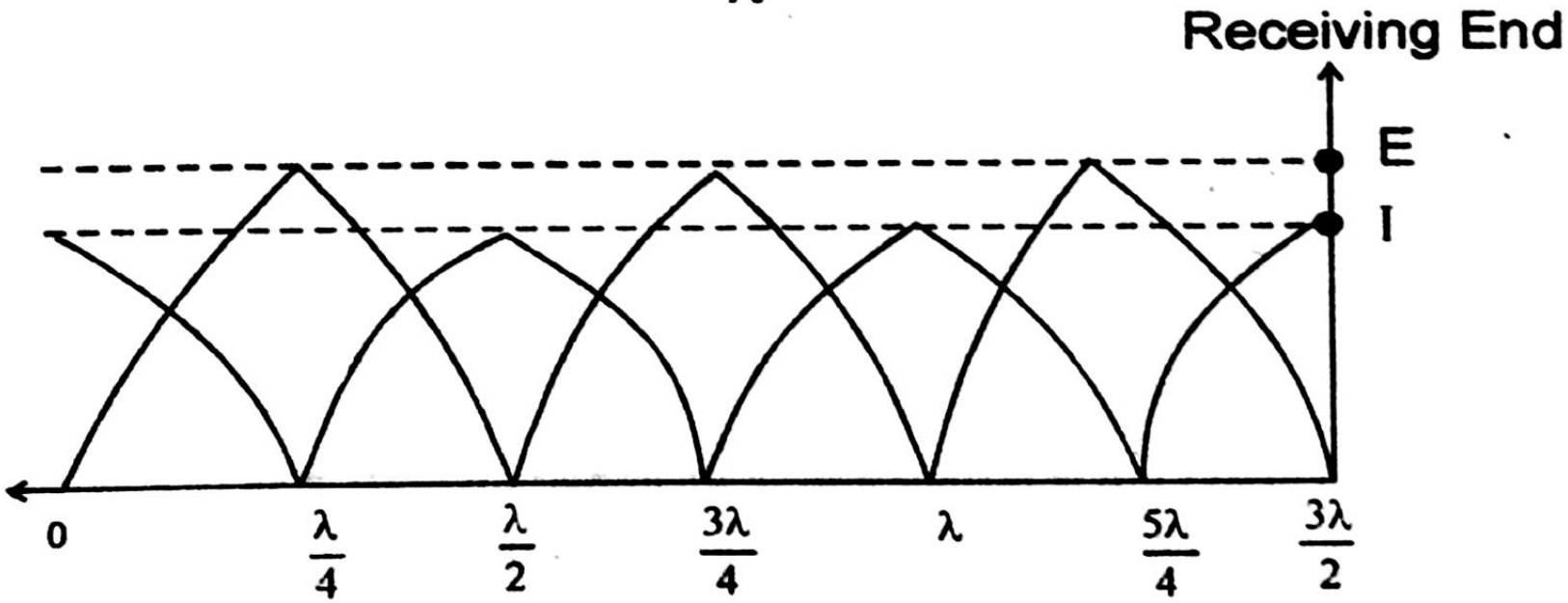

Short circuited line $R_R = 0$

(3) **When the line is terminated in an impedance $Z_R = R_o$,** the reflection coefficient and reflected wave becomes zero.

$$K = \frac{Z_R - Z_0}{Z_R + Z_0} = 0$$

$$E = E_R \, e^{j\beta s}$$

$$I = I_R \, e^{j\beta s}$$

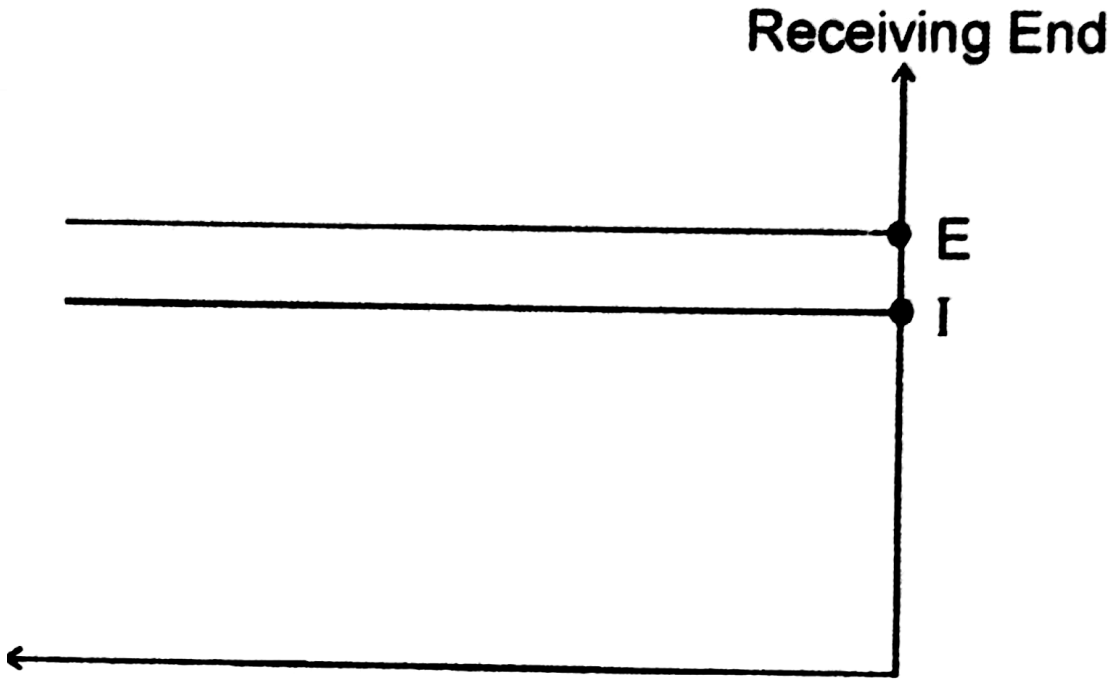

Line is terminated in an impedance $R_R = R_o$

The voltage and current distributions are represent by horizontal lines when

$$R_R = R_o.$$

(4) When $R_R = 3R_o$, $K = \frac{1}{2}$, there is a finite value of voltage (or) current at all points on the line

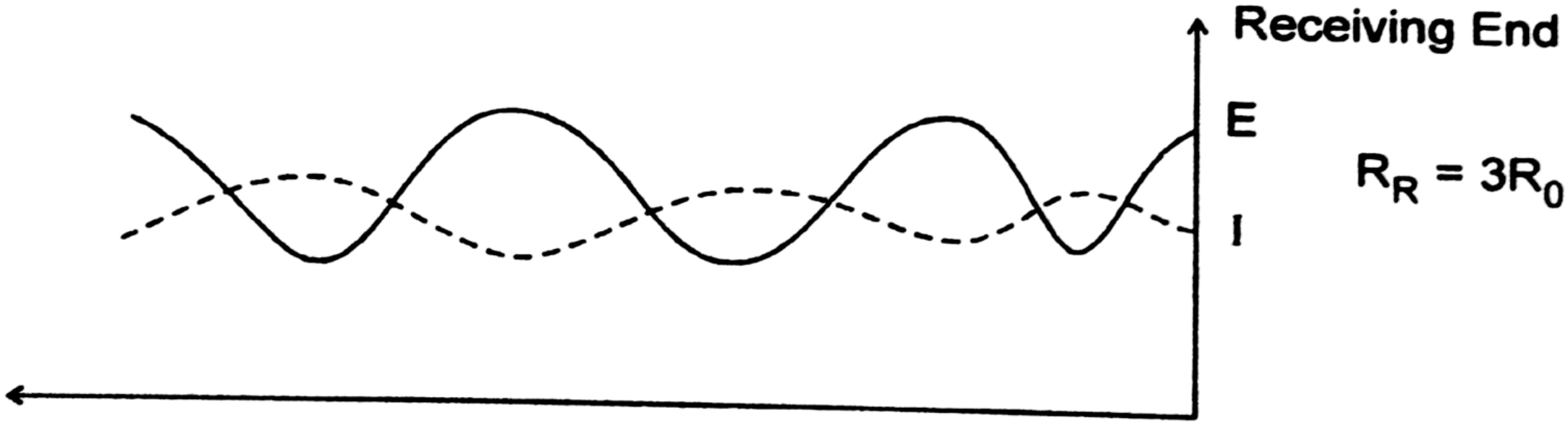

Line is terminated in an impedance, $R_R = 3R_o$

Standing Waves: Nodes

The actual voltage at any point on a transmission line is the sum of the incident and the reflected voltages at that point. It can be seen that the resultant total voltage appears to stand still on the line, oscillating in magnitude with time but having fixed positions of maxima and minima. Such a wave is known as **a standing wave**.

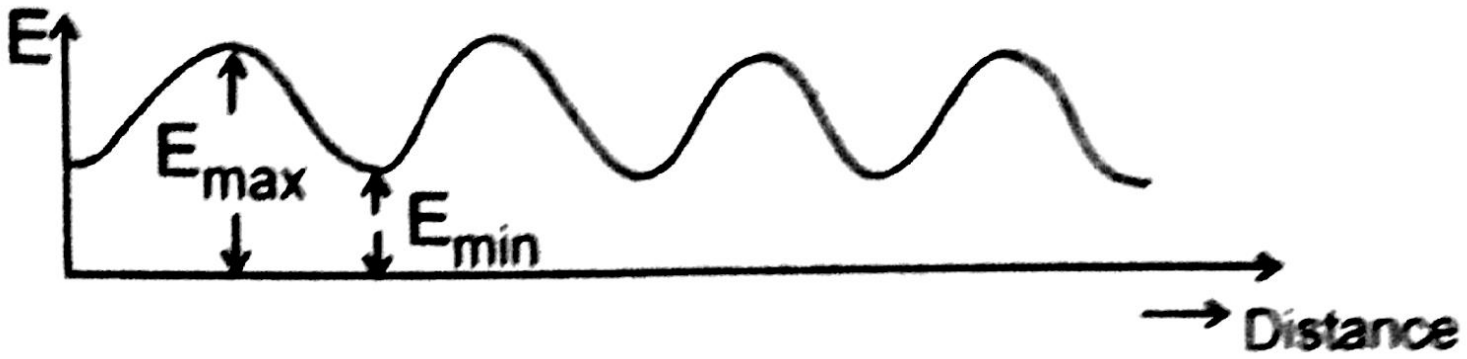

Standing waves on a dissipationless line terminated in a load not equal to R_0

If a line is terminated in a load other than R_o, the distribution of voltage at a point along the line consists of maximum and minimum values of voltage as shown in figure

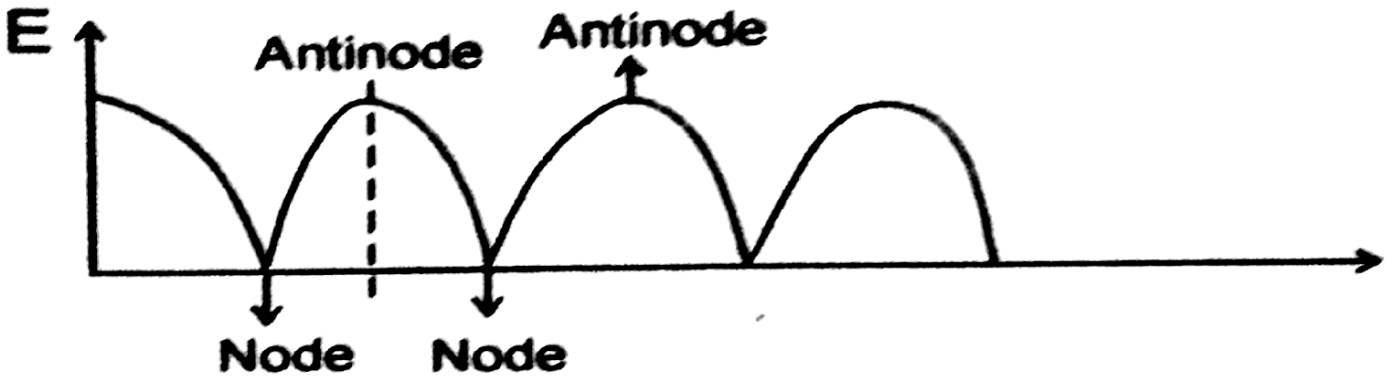

Standing waves on a line having open or short circuited terminations

If the line is either short circuited or open circuited at the receiving end, we get nodes and antinodes in the voltage distribution as shown in figure

Nodes are the points of zero voltage or current ($E = I = 0$) in the standing wave systems.

Antinodes or loops are points of maximum voltage or current.

A line terminated in R_o has no standing wave and thus no nodes or loops and is called a **smooth line.**

For open circuit, the voltage nodes occur at distances $\frac{\lambda}{4}, \frac{3\lambda}{4}, \frac{5\lambda}{4}$ and so on from the open end of the linc. Under the same conditions, the current nodes occur at a distance $0, \frac{\lambda}{2}, \lambda, \frac{3\lambda}{2}$ and so on for open termination.

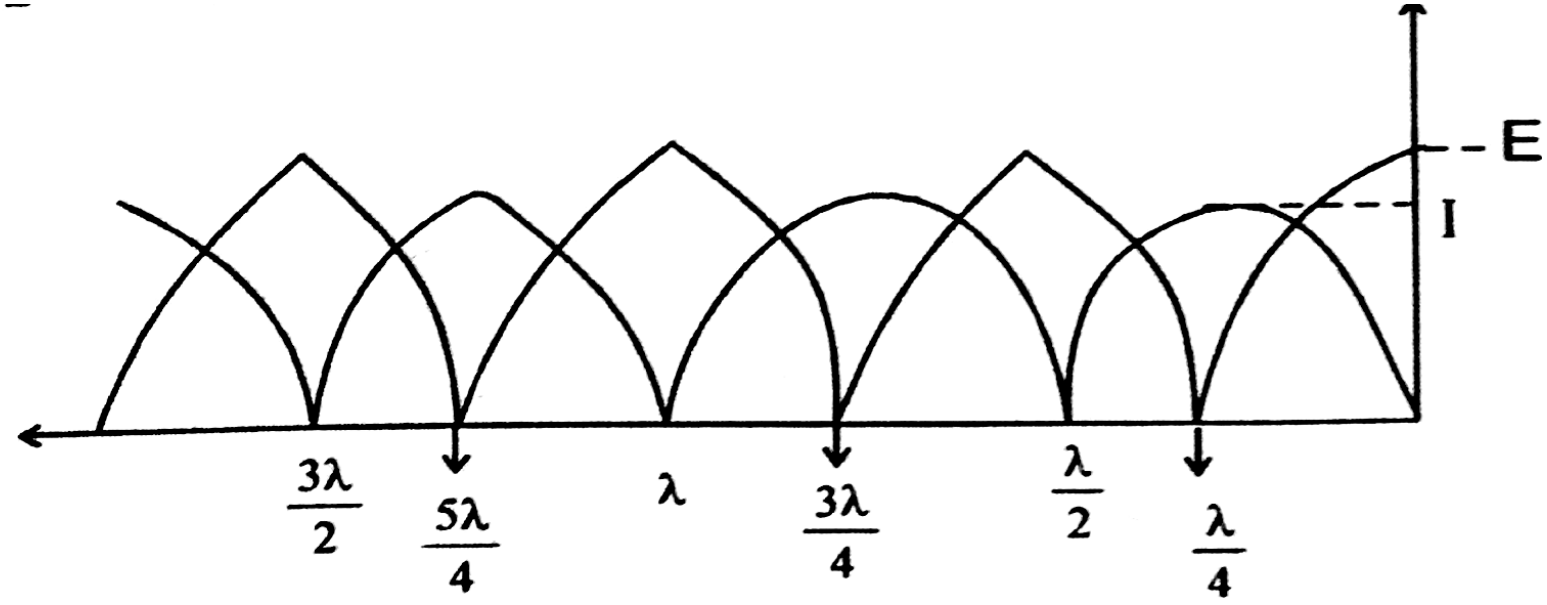

Open end of line

For short circuit, these nodal points shift by a distance of $\frac{\lambda}{4}$

Voltage nodes occur at $0, \frac{\lambda}{2}, \lambda$ and so on,

Current nodes occur at $\frac{\lambda}{4}, \frac{3\lambda}{4}, \frac{5\lambda}{4}$ and so on.

Standing Wave Ratio

The ratio of the maximum to minimum magnitudes of current or voltage on a line having standing waves is called the standing wave ratio, S.

$$S = \left|\frac{E_{max}}{E_{min}}\right| = \left|\frac{I_{max}}{I_{min}}\right|$$

Relationship between Standing Wave Ratio and Reflection Coefficient:

The voltage at any point s from the receiving end for zero dissipation transmission line is given by,

$$E = \frac{E_R(Z_R + Z_0)}{2Z_R}\left(e^{j\beta s} + K\, e^{-j\beta s}\right)$$

Reflection Coefficient $K = |K| \angle\phi = |K| e^{j\phi}$

$$E = \frac{E_R(Z_R + Z_0)}{2Z_R} e^{j\beta s}\left(1 + |K| e^{j\phi} \cdot e^{-j2\beta s}\right)$$

$$= \frac{E_R(Z_R + Z_0)}{2Z_R} e^{j\beta s}\left(1 + |K| e^{j(\phi - 2\beta s)}\right)$$

$$E = \frac{E_R(Z_R + Z_0)}{2Z_R} e^{j\beta s}\left(1\angle 0 + |K| \angle\phi - 2\beta s\right)$$

In equation the first term represents the voltage in the **incident wave** while the second term represent the voltage in the **reflected wave**.

The voltage E at any point is the vector sum of the voltages in the incident and reflected wave.

The **maxima of voltage** along the line occur at points at which the incident and the reflected waves are in phase and add directly. When both the waves are in phase, their phase angles will be the same.

For E_{max}, $0 = \phi - 2\beta s$. $\because$ Phase angles are same.

$$E_{max} = \frac{E_R(Z_R + Z_0)}{2Z_R} e^{j\beta s}\left(1\angle 0 + |K|\angle 0\right)$$

$$E_{max} = \frac{E_R(Z_R + Z_0)}{2Z_R} e^{j\beta s}\left[1 + |K|\right]$$

The voltage minima occur at points at which the reflected and incident wave are out of phase hen the difference of angle of two waves is π.

For E_{min}, $\pi = \phi - 2\beta s$

$$E_{min} = \frac{E_R(Z_R + Z_0)}{2Z_R} e^{j\beta s} [1\angle 0 + |K|\angle \pi]$$

$$E_{min} = \frac{E_R(Z_R + Z_0)}{2Z_R} e^{j\beta s} [1 - |K|]$$

$$S = \frac{E_{max}}{E_{min}} = \frac{1+|K|}{1-|K|}$$

$$\boxed{S = \frac{1+|K|}{1-|K|}}$$

$$\frac{S-1}{S+1}=\frac{\dfrac{1+|K|}{1-|K|}-1}{\dfrac{1+|K|}{1-|K|}+1}=\frac{1+|K|-(1-|K|)}{1+|K|+(1-|K|)}=\frac{2|K|}{2}=|K|$$

$$\boxed{|K|=\frac{S-1}{S+1}}$$

$$|K|=\frac{S-1}{S+1}=\frac{|E_{max}|-|E_{min}|}{|E_{max}|+|E_{min}|}$$

Case (i) If $Z_R > R_0$ and substituting the value of $K = \dfrac{Z_R - R_0}{Z_R + R_0}$

$$S = \frac{1+|K|}{1-|K|} = \frac{1+\left(\dfrac{Z_R - R_0}{Z_R + R_0}\right)}{1-\left(\dfrac{Z_R - R_0}{Z_R + R_0}\right)} = \frac{2Z_R}{2R_0} = \frac{Z_R}{R_0}$$

Case (ii) If $Z_R < R_0$

$$S = \frac{1-|K|}{1+|K|} = \frac{1-\left(\dfrac{Z_R - R_0}{Z_R + R_0}\right)}{1+\left(\dfrac{Z_R - R_0}{Z_R + R_0}\right)} = \frac{2R_0}{2Z_R} = \frac{R_0}{Z_R}$$

The Input Impedance of the Dissipation less line

The input impedance of a dissipationless line is given by,

$$Z_S = \frac{E_S}{I_S} = \frac{E_R \cos\beta s + j I_R R_0 \sin\beta s}{I_R \cos\beta s + j\frac{E_R}{R_0}\sin\beta s} = R_0\left[\frac{E_R + j I_R R_0 \tan\beta s}{I_R \cdot R_0 + j E_R \tan\beta s}\right]$$

$$Z_S = R_o\left[\frac{\frac{E_R}{I_R} + j R_0 \tan\beta s}{R_0 + j\frac{E_R}{I_R}\tan\beta s}\right], \quad \therefore \text{ since } Z_R = \frac{E_R}{I_R}$$

$$Z_S = R_o \left(\frac{Z_R + j R_0 \tan \beta s}{R_0 + j Z_R \tan \beta s} \right)$$

The input impedance is complex in general and is periodic with variation of βs, the period being π or $s = \frac{\lambda}{2}$.

Another convenient form of input impedance can be obtained as

$$Z_s = \frac{E_S}{I_S} = \frac{\frac{I_R (Z_R + Z_0)}{2} \left(e^{j\beta s} + K e^{-j\beta s} \right)}{\frac{I_R (Z_R + Z_0)}{2 R_0} \left(e^{j\beta s} - K e^{-j\beta s} \right)}$$

$$= R_o \left(\frac{e^{j\beta s} + K e^{-j\beta s}}{e^{j\beta s} - K e^{-j\beta s}} \right)$$

$$Z_S = R_o \left[\frac{1\angle\beta s + |K| \angle\phi - \beta s}{1\angle\beta s - |K| \angle\phi - \beta s} \right]$$

where ϕ is the angle of reflection coefficient K

Dividing both numerator and denominator by $1 \angle \beta s$

$$Z_S = R_0 \left(\frac{1 + |K| \angle\phi - 2\beta s}{1 - |K| \angle\phi - 2\beta s} \right)$$

(i) The input impedance will be maximum at a distance of,

$$\phi = 2\beta s \quad \text{(or)} \quad \phi - 2\beta s = 0$$

$$s = \frac{\phi}{2\beta} \quad \text{(or) general expression} \quad s = \frac{\phi}{2\beta} + \frac{n\lambda}{2}$$

$$\therefore \quad Z_{S\,max} = R_0 \left(\frac{1+|K|}{1-|K|} \right) = R_0 S$$

where S represents voltage standing wave ratio

(ii) Input impedance will be minimum if $\phi - 2\beta s = \pi$, with phasors again coincident

General Expression: $s = \dfrac{\phi}{2\beta} + (2n-1)\dfrac{\lambda}{4}$

$$2\beta s = \phi + \pi$$

$$Z_{S\,min} = R_0 \left[\frac{1+|K|\angle\phi-(\phi+\pi)}{1-|K|\angle\phi-(\phi+\pi)}\right]$$

$$= R_0 \left[\frac{1+|K|\angle-\pi)}{1-|K|\angle-\pi)}\right]$$

$$= R_0 \left[\frac{1-|K|}{1+|K|}\right]$$

$$Z_{S\,min} = \frac{R_0}{S}$$

where S = standing wave ratio

Input impedance of Open and Short Circuited Lines

The input impedance of a dissipationless line is given by:

$$Z_s = R_0 \left(\frac{Z_R + j R_0 \tan \beta s}{R_0 + j Z_R \tan \beta s} \right)$$

(i) Input impedance of a short circuited line:

For a short circuited lines $Z_R = 0$

$$Z_{SC} = R_0 \left(\frac{j R_0 \tan \beta S}{R_0} \right)$$

$$Z_{SC} = j \; R_0 \; \tan \beta s$$

$$\boxed{Z_{SC} = j \; R_0 \; \tan \frac{2\pi s}{\lambda}}$$

$$\beta = \frac{2\pi}{\lambda}$$

$$Z_{SC} = j\,X = j\;R_0\;\tan\frac{2\pi s}{\lambda}$$

The variation of $\frac{Z_{SC}}{R_0} = \frac{X}{R_0} = j\tan\left(\frac{2\pi s}{\lambda}\right)$ with a length of line s is plotted as:

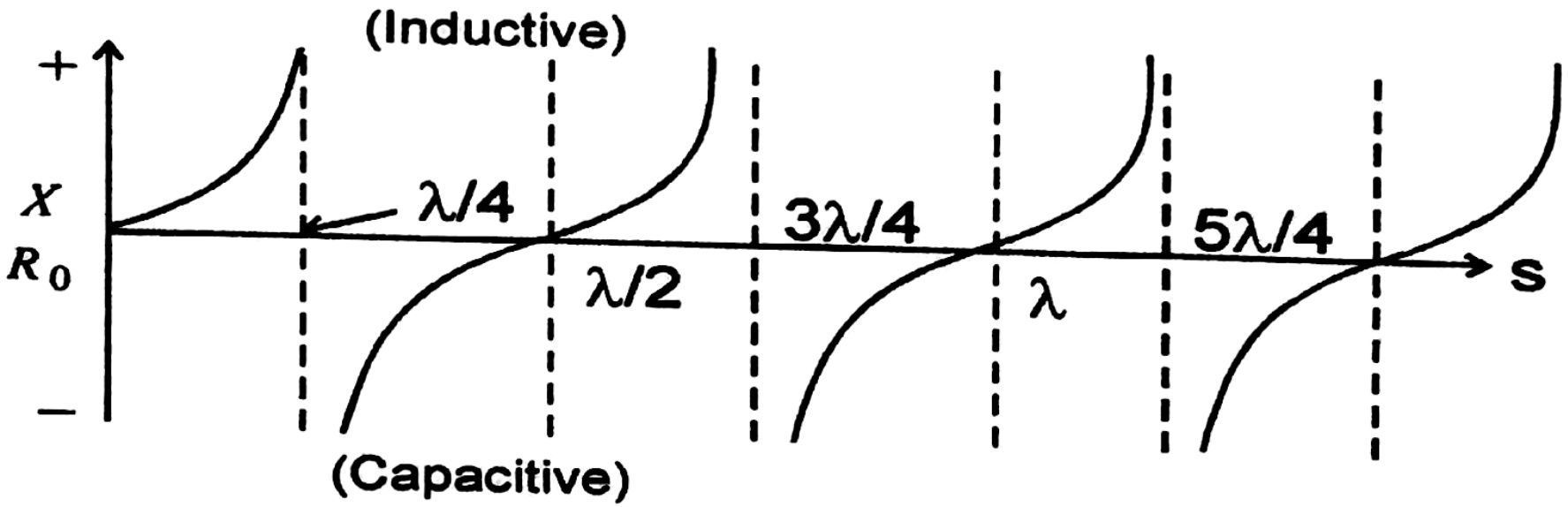

Short Circuited Line

(ii) Input impedance of a open circuited line:

The input impedance of a dissipationless line is given by

$$Z_S = R_0 \left(\frac{Z_R + j R_0 \tan \beta s}{R_0 + j Z_R \tan \beta s} \right)$$

For a open circuited line $Z_R = \infty$

$$Z_S = R_0 \left(\frac{1 + j \frac{R_0}{Z_R} \tan \beta s}{\frac{R_0}{Z_R} + j \tan \beta s} \right)$$

Sub. $Z_R = \infty$ $\quad Z_s = R_0 \left(\dfrac{1}{j \tan \beta s} \right) = -\dfrac{j R_0}{\tan \beta s}$

$$Z_s = Z_{OC} = -j\ R_0 \cot \beta s = -j\ R_0 \cot \frac{2\pi s}{\lambda}$$

Variation of $\dfrac{Z_{OC}}{R_0} = \dfrac{X}{R_0}$ as a function of length of line s for a open circuited line is plotted as:

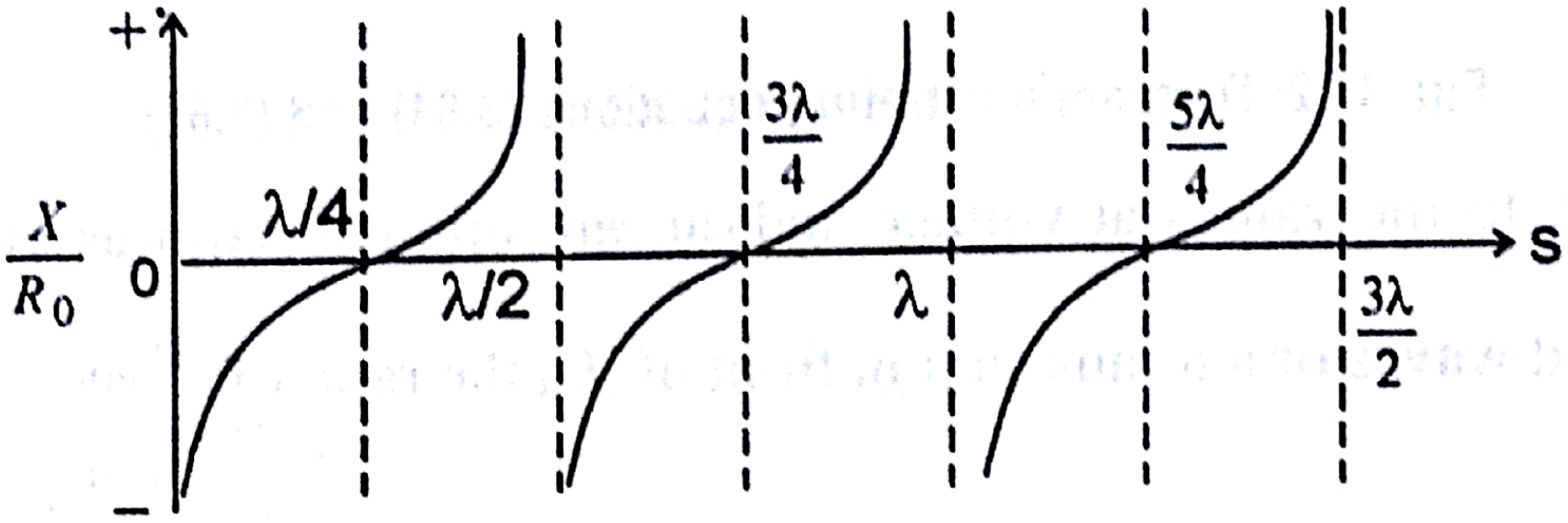

Open Circuited Line

Power and Impedance measurement on Lines

The voltage and current on the dissipationless line is given by,

$$E = \frac{I_R(Z_R + Z_0)}{2}\left(1 + |K| \angle \phi - 2\beta s\right)$$

$$I = \frac{I_R(Z_R + Z_0)}{2R_0}\left(1 - |K| \angle \phi - 2\beta s\right)$$

For a voltage maximum, the incident and the reflected waves are in phase. $1 \angle 0^\circ$ is proportional to the incident wave voltage and $|K| \angle \phi - 2\beta s$ is proportional to the reflected voltage.

$$E_{max} = \text{Inphase condition} = \frac{I_R(Z_R + Z_0)}{2}(1 + |K|)$$

Similar reasoning shows that at a current maximum the incident and reflected waves must be in phase, so that

$$I_{max} = \frac{I_R |Z_R + Z_0|}{2R_0} (1 + |K|)$$

$$\therefore \quad \frac{E_{max}}{I_{max}} = R_0$$

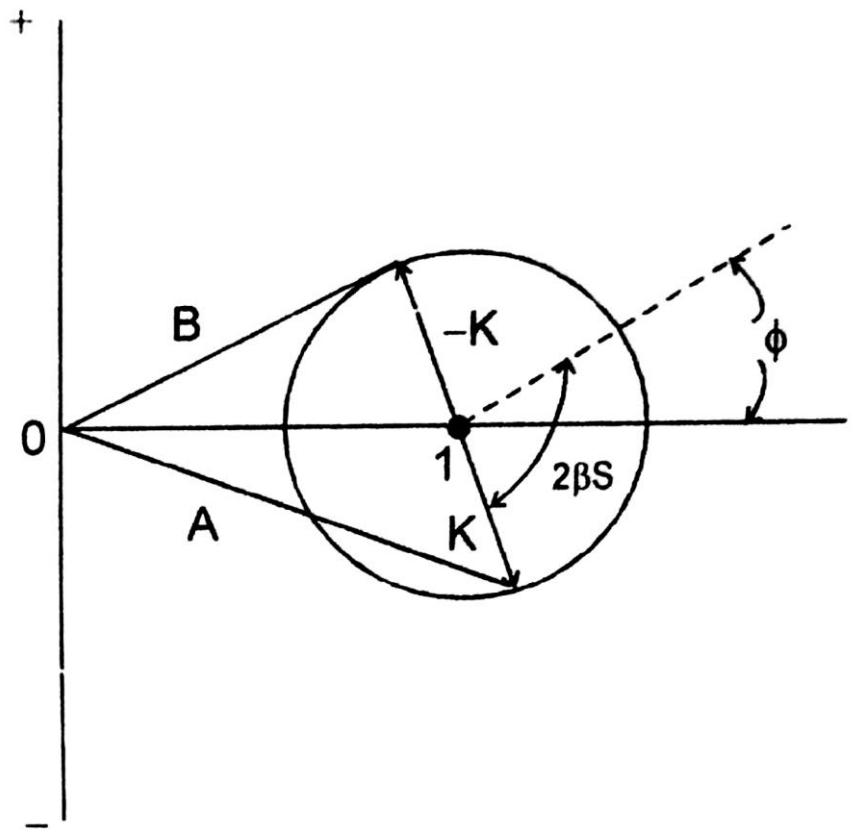

Diagram illustrating equations

Since a change to the values at voltage and current minima requires only the reverse of phase of the reflected waves or a minus sign in front of $|K|$, the ratio of $\frac{E_{min}}{I_{min}}$ is given by,

$$\frac{E_{min}}{I_{min}} = R_0$$

$$I_{min} = \frac{I_R |Z_R + Z_0|}{2R_0} (1 - |K|)$$

The resistive impedance seen at a voltage loop (Antinode) is

$$\frac{E_{max}}{I_{min}} = R_0 \left(\frac{1+|K|}{1-|K|}\right) = S R_0 = R_{max}$$

Since the voltage and current are again in phase at a current loop, the resistive impedance may be identified as R_{min}

$$\frac{E_{\min}}{I_{\max}} = \frac{R_0\left(1-|K|\right)}{\left(1+|K|\right)} = \frac{R_0}{S} = R_{min}$$

$$P = \frac{E_{\max}^2}{R_{\max}}$$

$$P = \frac{E_{\min}^2}{R_{\min}}$$

Multiplying the above two equations for power

$$P^2 = \frac{E_{\max}^2 \cdot E_{min}^2}{R_{\max} \cdot R_{\min}}$$

Substituting the values of R_{max}, R_{min}

$$P^2 = \frac{E_{max}^2 \cdot E_{min}^2}{\left(\frac{E_{max}}{I_{min}}\right) \cdot \left(\frac{E_{min}}{I_{max}}\right)} = \frac{E_{max}^2 \cdot E_{min}^2}{SR_0 \cdot \frac{R_0}{S}}$$

$$P^2 = \frac{E_{max}^2 \cdot E_{min}^2}{R_0^2}$$

$$P = \frac{|E_{max}| \cdot |E_{min}|}{R_0}$$

Similarly $\boxed{P = |I_{max}|\,|I_{min}| \cdot R_0}$

Measurement of unknown load impedance

The unknown value of a load impedance Z_R connected to a transmission line may be determined by standing wave measurements on the open wire or slotted line. Bridge circuit is used for the measurement of unknown impedance.

At the point of voltage minimum at a distance s' from the load it can be shown that

$$Z_S = R_{min} = \frac{R_0}{S}$$

At any point on the line, the input impedance is given by,

$$Z_S = R_0 \left[\frac{Z_R + j R_0 \tan(2\pi s'/\lambda)}{R_0 + j Z_R \tan(2\pi s'/\lambda)} \right] = \frac{R_0}{S}$$

Solving for Z_R gives,

$$R_0 + j\,Z_R \tan\left(\frac{2\pi s'}{\lambda}\right) = S\left[Z_R + j\,R_0 \tan\left(\frac{2\pi s'}{\lambda}\right)\right]$$

$$-SZ_R + j\,Z_R \tan\left(\frac{2\pi s'}{\lambda}\right) = -R_0 + j\,R_0\,S \tan\left(\frac{2\pi s'}{\lambda}\right)$$

$$-Z_R\left[S - j\tan\left(\frac{2\pi s'}{\lambda}\right)\right] = -R_0\left[1 - j\,S\tan\left(\frac{2\pi s'}{\lambda}\right)\right]$$

$$Z_R = R_0 \left[\frac{1 - jS \tan\left(\frac{2\pi s'}{\lambda}\right)}{S - j \tan\left(\frac{2\pi s'}{\lambda}\right)} \right]$$ gives the value of connected load impedance

$$Z_R = R_0 \left[\frac{1 - jS \tan \beta s'}{S - j \tan \beta s'} \right]$$

where $\beta = \frac{2\pi}{\lambda}$

Reflection losses on the Unmatched line

The maximum voltage is attained when incident and reflected waves are in phase

$$|V_{max}| = |V_i| + |V_r|$$

$$= \frac{|I_R (Z_R + Z_0)|}{2} (1 + |K|)$$

The minimum voltage is attained when incident and reflected waves are in out of phase.

$$|V_{min}| = |V_i| - |V_r|$$

$$= \frac{|I_R (Z_R + Z_0)|}{2} (1 - |K|)$$

$\therefore$ Standing wave ratio is $$S = \frac{|V_{max}|}{|V_{min}|} = \frac{|V_i| + |V_r|}{|V_i| - |V_r|}$$

Power delivered to the load $$P = \frac{|V_{max}||V_{min}|}{Z_0}$$

$$= \frac{(|V_i| + |V_r|)(|V_i| - |V_r|)}{Z_0}$$

$$= \frac{|V_i|^2 - |V_r|^2}{Z_0}$$

If P_i is the transmitted power in the incident wave and P_r is the reflected power in the reflected wave, power delivered to the load

$$P = P_i - P_r$$

The ratio of power delivered to the load to the power transmitted by incident wave is given by

$$\frac{P}{P_i} = \frac{P_i - P_r}{P_i} = 1 - \frac{P_r}{P_i}$$

$$= 1 - \frac{|V_r|^2}{|V_i|^2}$$

$$= 1 - |K|^2$$

Measurement of VSWR and Wavelength

VSWR and the ***magnitude of voltage reflection*** coefficient are very important parameters which determine the ***degree of impedance matching***.

VSWR and Γ are also used for measurement of ***load impedance*** by the slotted line method.

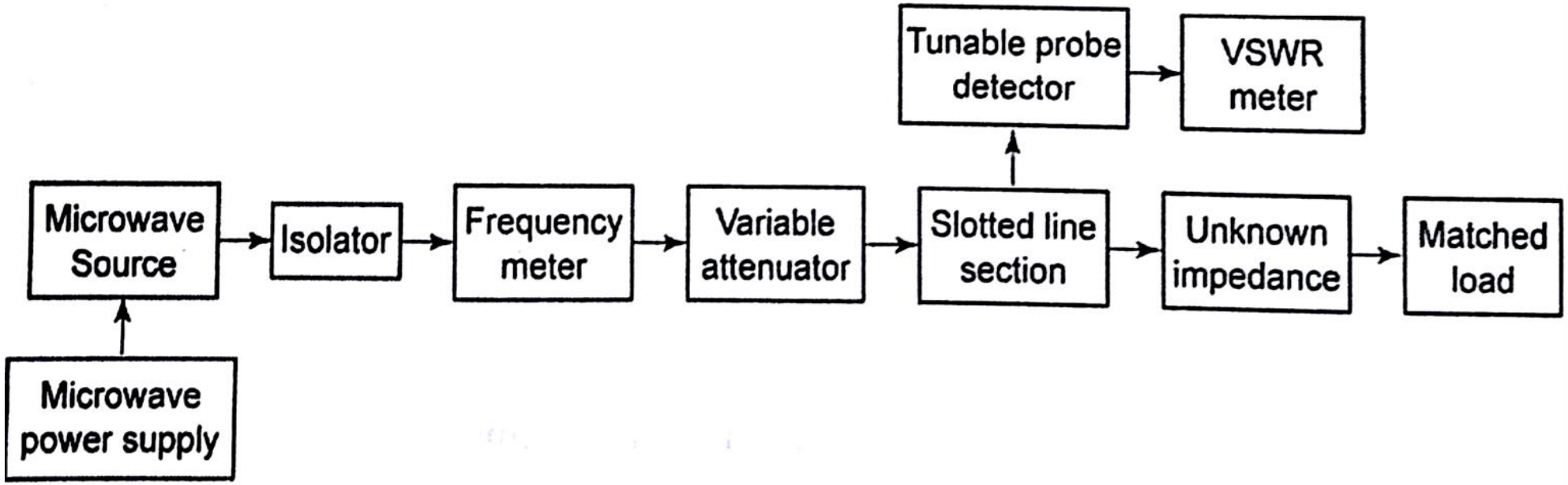

When a load $Z_L \neq Z_o$ is connected to the transmission line, the standing waves are produced.

VSWR can be measured by detecting V_{max} and V_{min} in the ***VSWR meter***.

$$\text{Standing wave ratio (S)} = \frac{V_{max}}{V_{min}} = \frac{1+\Gamma}{1-\Gamma}$$

$$\Gamma = \text{Reflection coefficient} = \frac{P_{reflected}}{P_{incident}}$$

LOW VSWR (S < 20)

HIGH VSWR (S > 20)

Reflection Coefficient:

The ratio of electrical field strength of reflected and incident wave is called the reflection coefficient.

$$\Gamma = \frac{E_r}{E_I} = \frac{Z - Z_0}{Z + Z_0}$$

where, Z is the impedance at a point,

Z_0 is characteristic impedance

The above equation gives following equation

$$|\Gamma| = \frac{S-1}{S+1}$$

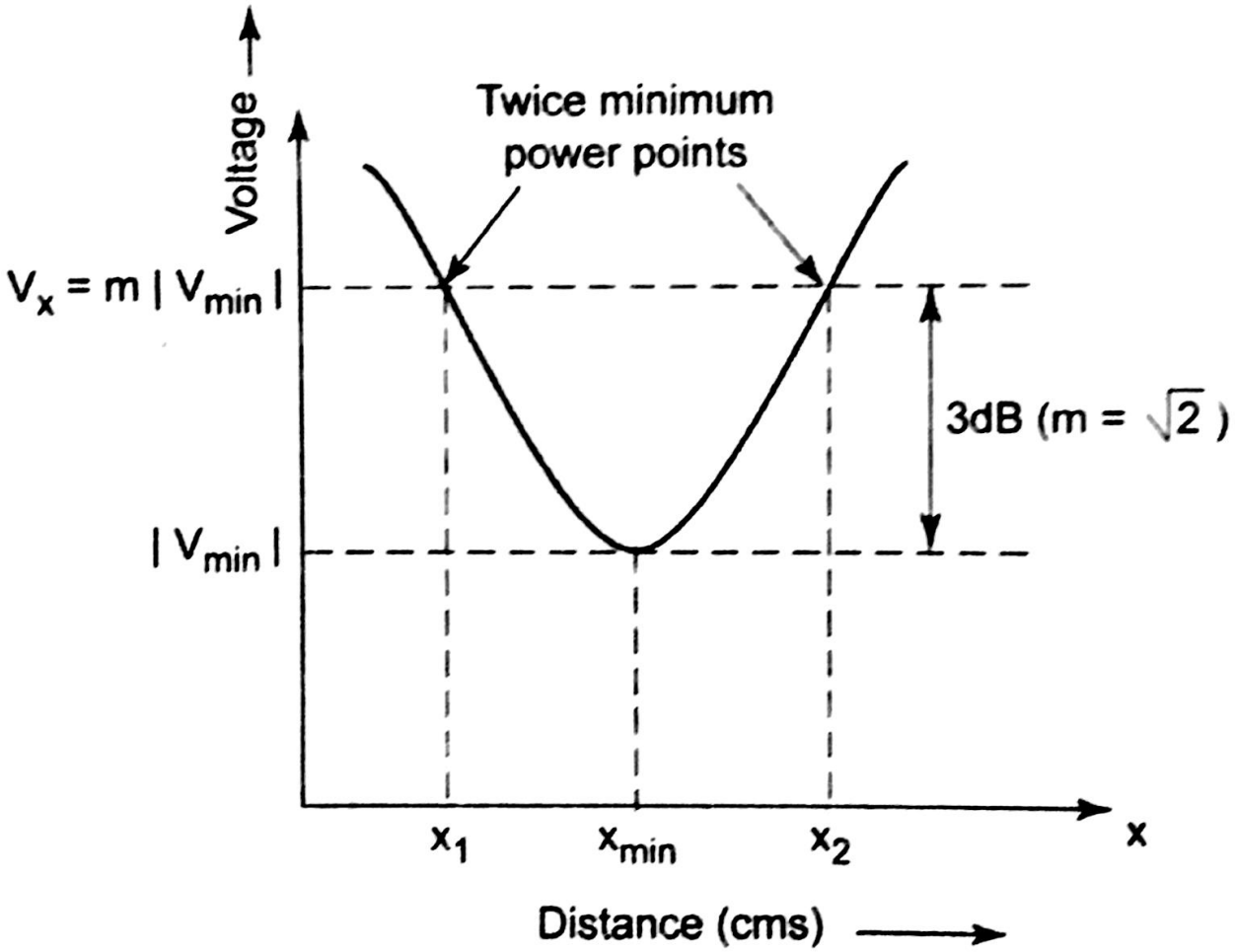

Double minima method

VSWR denoted by S is,

$$S = \frac{E_{max}}{E_{min}} = \frac{|E_I| + |E_r|}{|E_I| - |E_r|}$$

where, E_I – Incident voltage, and

E_r – Reflected voltage.

$$P_{min} \propto V_{min}^2$$

$$2\,P_{min} \propto V_x^2$$

$$\frac{1}{2} = \frac{V_{min}^2}{V_x^2}$$

$$V_x^2 = 2(V_{min})^2$$

$$\boxed{V_x = \sqrt{2}\, V_{min}}$$

Guide Wavelength:

By moving the probe between two successive minima, a distance equal to $\frac{\lambda_g}{2}$ is found to determine the guide wavelength λ_g.

$$\lambda_g = \frac{\lambda_0}{\sqrt{1-\left(\frac{\lambda_0}{\lambda_C}\right)^2}}$$

For TE_{10} mode,

$$\text{Cut off wavelength } \lambda_C = 2a.$$

$$\text{Free space wavelength } \lambda_o = \frac{c}{f}$$

High VSWR:

High VSWR can be calculated using the empirical relation as,

$$\boxed{S = \frac{\lambda_g}{\pi\left(x_1 - x_2\right)}}$$

Find the reflection coefficient and voltage standing wave ratio of a line having $R_0 = 100\,\Omega$ and $Z_R = 100 - j100\,\Omega$.

Given: $Z_R = 100 - j100\,\Omega$

$Z_0 = R_0 = 100\,\Omega$.

reflection coefficient K is given by $K = \dfrac{Z_R - Z_0}{Z_R + Z_0} = \dfrac{100 - j100\Omega - 100}{100 - j100\Omega + 100}$

$$= \frac{-j100}{200 - j100} = \frac{100\angle -90^{\circ}}{223.61\angle -26.57^{\circ}}$$

$$K = 0.4472\ \angle -63.43^{\circ}$$

The voltage standing wave ratio is given by,

$$S = \frac{1+|K|}{1-|K|} = \frac{1+0.4472}{1-0.4472} = 2.618$$

$$S = 2.618$$

Determine K of a line for which $Z_R = 200\,\Omega$, $Z_0 = 692\angle -12^\circ\ \Omega$. [May/June - 2005]

Given: $Z_R = 200\ \Omega \quad Z_0 = 692\ \angle -12^\circ\,\Omega$

$$K = \frac{Z_R - Z_0}{Z_R + Z_0} = \frac{200 - 692\angle -12^\circ}{200 + 692\angle -12^\circ}$$

$$= \frac{200 - (676.80\ j143.8)}{200 + (676.8 - j143.8)} = \frac{-467.8 + j143.8}{876.8 - j143.8}$$

$$K = \frac{489.4\angle -162.91^\circ}{888.51\angle -9.31^\circ} = 0.55\angle -153.6^\circ$$

A 50 Ω line is terminated in a load. $Z_R = 90 + j60$ ohms. Determine the reflection coefficient.

[November/December -2007]

$$K = \frac{Z_R - Z_0}{Z_R + Z_0} = \frac{(90 + j60) - 50}{(90 + j60) + 50} = \frac{40 + j60}{140 + j60}$$

$$= \frac{72.111\angle 56.31^{o}}{152.3154\angle 23.2^{o}}$$

$$= 0.4734\angle 33.11^{o}$$

A radio frequency line with $Z_0 = 70$ ohm is terminated by $Z_L = 115 - j80$ ohms at $\lambda = 2.5$ m. Find the VSWR and the maximum and the minimum line impedances.

[November/December - 2007]

Given: $Z_0 = 70\ \Omega,\ Z_L = 115 - j80\ \Omega$

(i) The reflection coefficient K is given by

$$K = \frac{Z_R - Z_0}{Z_R + Z_0} = \frac{(115 - j80) - 70}{(115 - j80) + 70} = \frac{45 - j80}{185 - j80}$$

$$K = \frac{91.7877\angle -60.64^{\circ}}{201.5564\angle -23.38^{\circ}} = 0.4553\angle -37.26^{\circ}$$

(ii) $$VSWR = S = \frac{1+|K|}{1-|K|} = \frac{1+0.4553}{1-0.4553} = 2.6717$$

(iii) Maximum line impedance is given by,

$$R_{max} = SZ_0 = SR_0 = (2.6717)\,(70) = 187.02\,\Omega$$

(iv) Minimum line impedance is given by,

$$R_{min} = \frac{Z_0}{S} = \frac{R_0}{S} = \frac{70}{2.6717} = 26.2\Omega$$

An open wire line consists of two copper condutors each of radius 2 mm and are separated by a distance of 250 mm in air. Calculate the following per unit length of the line, if the frequency of the wave signal is 40 kHz.

(i) Inductance L

(ii) Capacitance C

(iii) dc resistance R_{dc} given that for copper

$$\sigma = 5.75 \times 10^7 \, \mho / m$$

(iv) ac resistance R_{ac}.

Given: $a = 2\text{mm} = 2 \times 10^{-3}\text{m}$

$d = 250\text{mm} = 250 \times 10^{-3} = 0.25\text{m}$

$f = 40$ kHz.

$$\sigma = 5.75 \times 10^7 \, \mho / m$$

(i) The inductance L is given by,

$$L = 9.21 \times 10^{-7} \log_{10} \frac{d}{a} H/m$$

$$= 9.21 \times 10^{-7} \log_{10} \left(\frac{0.25}{0.002} \right)$$

$$L = 1.931 \mu H/m$$

(ii) The capacitance C is given by,

$$C = \frac{12.07 \varepsilon_r}{\log_{10} \frac{d}{a}} \times 10^{-12} F/m$$

$$= \frac{12.07 \times 1}{\log_{10}\left(\frac{0.25}{0.002}\right)} \times 10^{-12} F/m \qquad [\because \varepsilon_r = 1 \ for \ air]$$

$$= 5.756 \ x \ 10^{-12} \ F/m$$

(iii) The dc resistance R_{dc} each conductor is given by,

$$R_{dc} = \frac{l}{\pi a^2 \sigma}$$

$$= \frac{1}{\pi (0.002)^2 \times (5.75 \times 10^7)}$$

$$= 1.385 \times 10^{-3} \Omega / m$$

(iv) The ratio of ac to dc resistance is given by,

$$\frac{R_{ac}}{R_{dc}} = 7.53a\sqrt{f}$$

$$R_{ac} = (R_{dc})(7.53a\sqrt{f})$$

$$= (1.385\times10^{-3})(7.53\times2\times10^{-3}\times\sqrt{40\times10^{3}})$$

$$R_{ac} = 4.1716\times10^{-3}\,\Omega/m$$

A coaxial cable is made of copper having conductivity of 5.75×10^7 ℧/m. The inner conductor has a radius of 2mm, the outer conductor has inner radius of 8mm and has a thickness of 1 mm. The space between conductors is filled with a dielectric material of relative permittivity of 4.

Calculate per km the following:

(i) inductance L

(ii) capacitance C

(iii) dc resistance R_{dc}

(iv) ac resistance R_{ac} at frequency of 150 kHz.

Given: $\sigma = 5.75 \times 10^7 \mho / m$

$a = 2\text{mm} = 0.002\text{m}$

$b = 8\text{mm} = 0.008\text{m}$

$c = 9\text{mm} = 0.009\text{m}$

$\varepsilon_r = 4$

$f = 150 \times 10^3$ Hz.

(i) The inductance L is given by,

$$L = 4.61 \times 10^{-7} \log_{10}\left(\frac{b}{a}\right) H / m$$

$$= 4.61 \times 10^{-7} \log_{10}\left(\frac{0.008}{0.002}\right)$$

$$L = 2.78 \times 10^{-7}\ H/m$$

$$L = 0.278 \text{ mH/km.}$$

(ii) The capacitance C is given by,

$$C = \frac{24.13 \times 10^{-12} \varepsilon_r}{\log_{10} \frac{b}{a}} F/m = \frac{24.13 \times 10^{-12}(4)}{\log_{10}\left(\frac{0.008}{0.002}\right)}$$

$$= 1.603 \times 10^{-10}\ F/m$$

$$C = 0.1603\ \mu \text{F/m}$$

(iii) The dc resistance of coaxial cable is given by,

$$R_{dc} = \frac{1}{\pi\sigma}\left[\frac{1}{a^2} + \frac{1}{c^2 - b^2}\right]\Omega/m$$

$$= \frac{1}{\pi(5.75\times10^7)}\left[\frac{1}{(2\times10^{-3})^2} + \frac{1}{(9\times10^{-3})^2 - (8\times10^{-3})^2}\right]$$

$$R_{dc} = 1.71\times10^{-3}\Omega/m$$

$$R_{dc} = 1.71\ \Omega/\text{km}.$$

(iv) The ac resistance of coaxial cable is given by,

$$R_{ac} = 4.16\times10^{-8}\sqrt{f}\left[\frac{1}{a}+\frac{1}{b}\right]\Omega/m$$

$$= 4.16\times10^{-8}\sqrt{150\times10^{3}}\left[\frac{1}{2\times10^{-3}}+\frac{1}{8\times10^{-3}}\right]\Omega/m$$

$$= 0.01\ \Omega/\text{m}$$

$$R_{ac} = 10\ \Omega/\text{km}.$$

A lossless line has a standing wave ratio of 4. The R_0 is 150 ohm and the maximum voltage measured on the line is 135 V. Find the power being delivered to the load.

[May/June - 2006]

Given: $S = 4$, $R_0 = 150$ ohms, $E_{max} = 135$V.

At voltage maxima the impedance is given by,

$$R_{max} = SR_0 = 4(150) = 600\,\Omega$$

The power delivered to the load is given by,

$$P = \frac{E_{\max}^2}{R_{\max}} = \frac{(135)^2}{600} = 30.375W$$

A line having a characteristic impedance of 50 Ω is terminated in load impedance (75 + *j*75)Ω. Determine the reflection coefficient and voltage standing wave ratio.

Given : $Z_R = (75 + j75)\Omega \quad Z_0 = 50\Omega$

Reflection coefficient is given by, $K = \dfrac{Z_R - Z_0}{Z_R + Z_0} = \dfrac{(75 + j75) - 50}{(75 + j75) + 50} = \dfrac{25 + j75}{125 + j75}$

$$= \frac{79.056 \angle 71.56^{\circ}}{145.7738 \angle 30.96^{\circ}}$$

$$K = 0.5423 \quad \angle 40.6^{\circ}$$

The VSWR ratio is given by,

$$VSWR = S = \frac{1 + |K|}{1 - |K|} = \frac{1 + 0.5432}{1 - 0.5423} = 3.369$$

UNIT III
IMPEDANCE MATCHING IN HIGH FREQUENCY LINES

Impedance matching: Quarter wave transformer - Impedance matching by stubs - Single stub and double stub matching - Smith chart - Solutions of problems using Smith chart - Single and double stub matching using Smith chart

Impedance matching

It is important to transfer radio frequency signal from the source to the load through transmission lines without power loss.

To achieve this the source impedance and load impedance have to be matched

For maximum power transfer the load impedance must be complex conjugate of source impedance

$$R_L + jX_L = R_S - jX_S$$

A network which is used to match the load impedance with source impedance is called matching network

One eighth wave line, quarter wave line and half wave line are used as matching networks

One eighth Wave line

For the transmission line the voltage and current at any point distant x from the receiving end of the transmission line is

$$V = \frac{V_R (Z_R + Z_0)}{2 Z_R} (e^{\gamma x} + K e^{-\gamma x})$$

$$I = \frac{I_R (Z_R + Z_0)}{2 Z_0} (e^{\gamma x} - K e^{-\gamma x})$$

For the line of zero dissipation, the attenuation constant α is zero. *i.e.*, $\gamma = j\beta$ and $Z_0 = R_0$.

$$V = \frac{V_R (Z_R + R_0)}{2 Z_R} (e^{j\beta x} + K e^{-j\beta x})$$

$$= \frac{V_R}{2Z_R}\left[Z_R\left(e^{j\beta x} + K e^{-j\beta x}\right) + R_0\left(e^{j\beta x} + K e^{-j\beta x}\right)\right]$$

For standing wave $|K| = 1$,

$$V = V_R \frac{\left(e^{j\beta x} + e^{-j\beta x}\right)}{2} + \frac{V_R R_0}{Z_R} \frac{\left(e^{j\beta x} - e^{-j\beta x}\right)}{2}$$

But $V_R = I_R Z_R$

$$V = V_R \frac{\left(e^{j\beta x} + e^{-j\beta x}\right)}{2} + j\, I_R R_0 \frac{\left(e^{j\beta x} - e^{-j\beta x}\right)}{2j}$$

$$= V_R \cos\beta x + j\, I_R R_0 \sin\beta x$$

Similarly, for the current on the transmission line

$$I = I_R \cos \beta x + j \frac{V_R}{R_O} \sin \beta x$$

The input impedance of a dissipation line is

$$Z_S = \frac{V}{I}$$

$$= \frac{V_R \cos \beta x + j\, I_R R_0 \sin \beta x}{I_R \cos \beta x + j \frac{V_R}{R_0} \sin \beta x}$$

$$Z_S = \frac{I_R Z_R \cos \beta x + j\, I_R R_0 \sin \beta x}{I_R \cos \beta x + j \frac{I_R Z_R}{R_0} \sin \beta x}$$

$$= \frac{Z_R \cos \beta x + j\, R_0 \sin \beta x}{\cos \beta x + j \dfrac{Z_R}{R_0} \sin \beta x}$$

$$= R_0 \left[\frac{Z_R \cos \beta x + j\, R_0 \sin \beta x}{R_0 \cos \beta x + j\, Z_R \sin \beta x} \right]$$

$$Z_S = R_0 \left[\frac{Z_R + j\, R_0 \tan \beta x}{R_0 + j\, Z_R \tan \beta x} \right]$$

For an eighth wave line $x = \lambda/8$,

$$\beta x = \frac{2\pi}{\lambda} \cdot \frac{\lambda}{8} = \frac{\pi}{4}$$

$$Z_S = R_0\left[\frac{Z_R + j\,R_0 \tan(\pi/4)}{R_0 + j\,Z_R \tan(\pi/4)}\right]$$

$$Z_S = R_0\left[\frac{Z_R + j\,R_0}{R_0 + j\,Z_R}\right]$$

If such a line is terminated with pure resistance R_R *i.e.*, $Z_R = R_R$

$$Z_S = R_0\left[\frac{R_R + j\,R_0}{R_0 + j\,R_R}\right]$$

Since, both the numerator and denominator have identical magnitudes, then

$$|Z_S| = R_0$$

Quarter wave line (Quarter Wave Transformer)

The input impedance of a dissipationless transmission line is

$$Z_S = R_0\left[\frac{Z_R + j\,R_0 \tan\beta x}{R_0 + j\,Z_R \tan\beta x}\right]$$

$$Z_S = R_0\left[\frac{\dfrac{Z_R}{\tan\beta x} + j\,R_0}{\dfrac{R_0}{\tan\beta x} + j\,Z_R}\right]$$

For a quarter wave line $x = \lambda/4$,

$$\beta x = \frac{2\pi}{\lambda} \cdot \frac{\lambda}{4} = \frac{\pi}{2}$$

$$Z_S = R_0 \left[\frac{\dfrac{Z_R}{\tan \pi/2} + j R_0}{\dfrac{R_0}{\tan \pi/2} + j Z_R} \right] = R_0 \left[\frac{j R_0}{j Z_R} \right]$$

$$Z_S = \frac{R_0^2}{Z_R}$$

$$R_0' = \left| \sqrt{Z_S Z_R} \right|$$

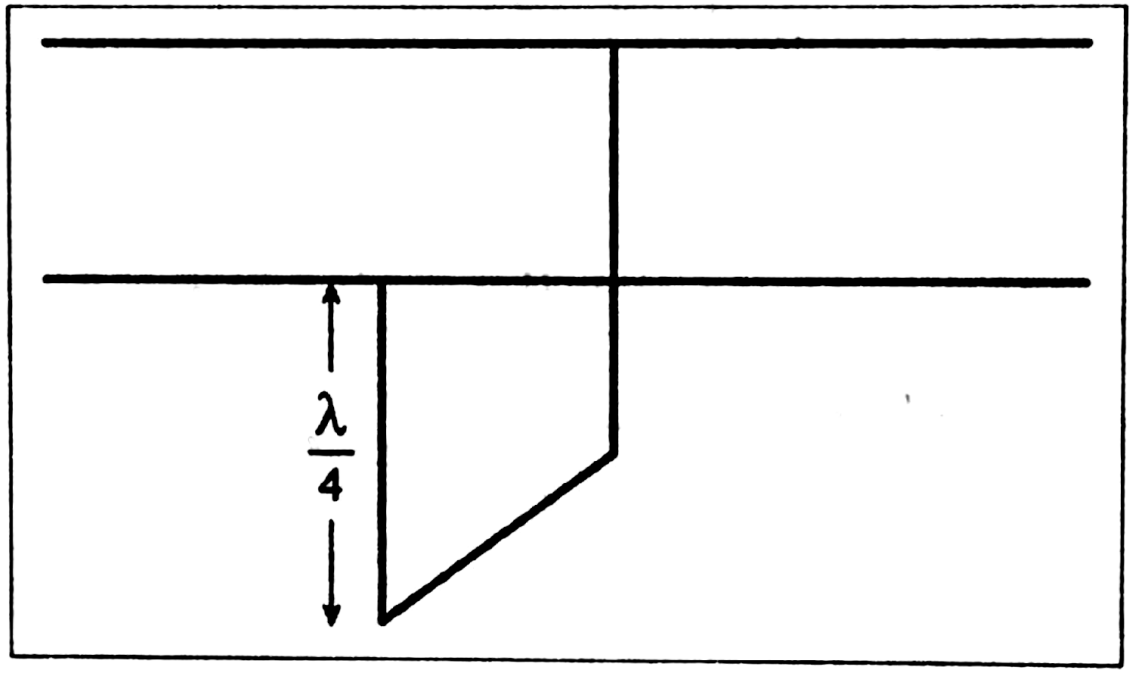

Quarter wave transformer

Half-Wave Line

The input impedance of a dissipationless transmission line is

$$Z_S = R_0 \left[\frac{Z_R + j\, R_0 \tan \beta x}{R_0 + j\, Z_R \tan \beta x} \right]$$

For a half-wave line $x = \lambda/2$

$$\beta x = \frac{2\pi}{\lambda} \cdot \frac{\lambda}{2} = \pi$$

$$Z_S = R_0 \left[\frac{Z_R + j\, R_0 \tan \pi}{R_0 + j\, Z_R \tan \pi} \right]$$

$$= R_0 \frac{Z_R}{R_0}$$

$$Z_S = Z_R$$

A half wavelength of line may then be considered as one to one transformer. It has application in connecting a load to a source in cases when the load and source cannot be made adjacent.

Stub Matching

accomplishing impedance matching is the use of an open or short circuited line of suitable length, called stub at a designated distance from the load. This is called stub matching. There are two types of stub matching. They are:

(*i*) Single stub matching

(*ii*) Double stub matching

Single Stub Matching

A transmission line having a characteristic admittance Y_0 terminated with load conductance Y_R (load resistance Z_R) is shown in Fig.3.7. Since Y_R is different from Y_S, standing waves are set up in between source and load.

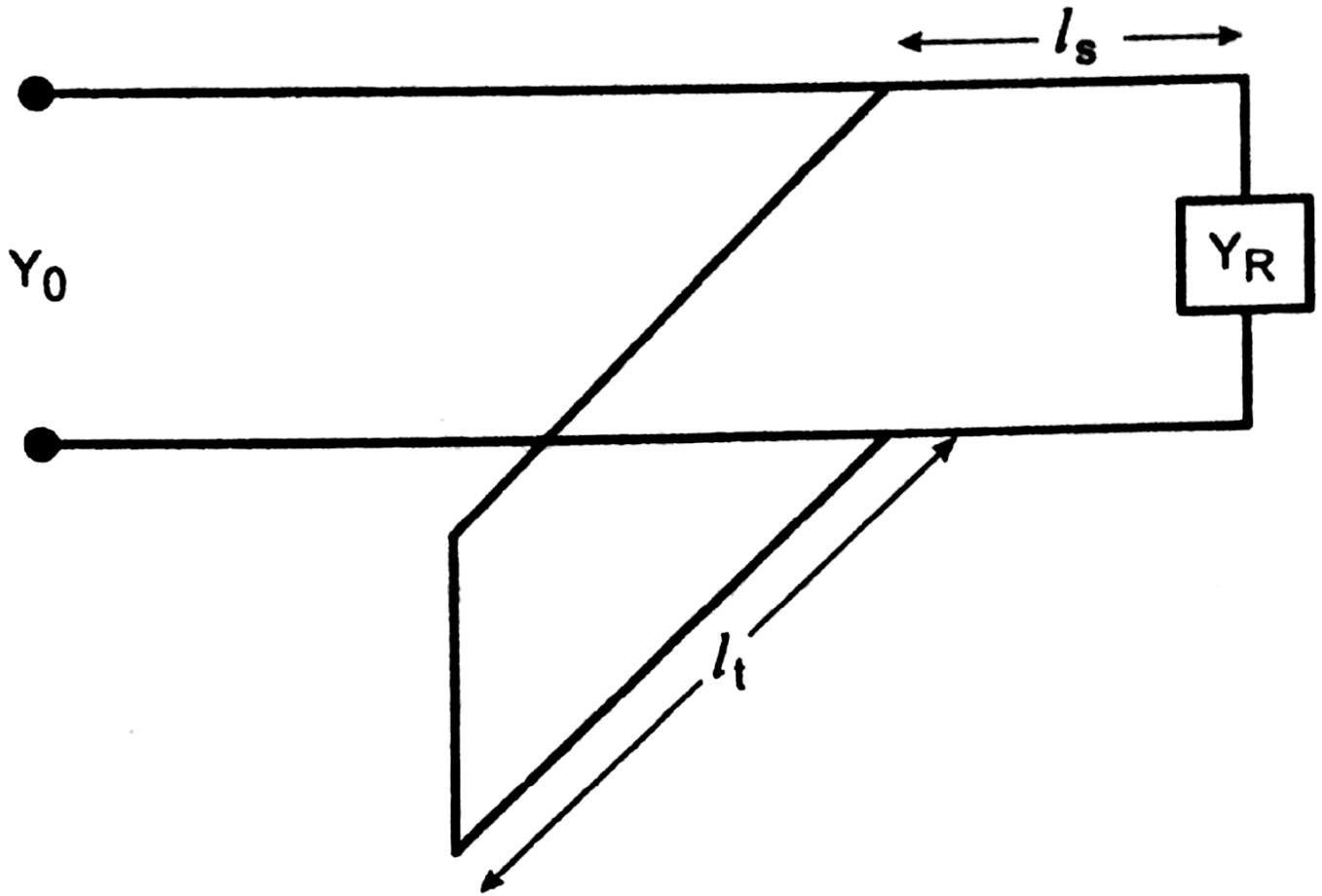

Single stub matching

The input impedance at any point of a transmission line is given by

$$Z_S = Z_0 \frac{Z_R + Z_0 \tanh \gamma l}{Z_0 + Z_R \tanh \gamma l}$$

The input admittance is $Y_S = Y_0 \dfrac{Y_R + Y_0 \tanh \gamma l}{Y_0 + Y_R \tanh \gamma l}$

For propagation $\gamma = j\beta$ $(\alpha = 0)$

$$Y_S = Y_0 \frac{Y_R + jY_0 \tan \beta l}{Y_0 + jY_R \tan \beta l}$$

For normalization, the above expression is divided by Y_0

$$\frac{Y_S}{Y_0} = \frac{Y_R + jY_0 \tan \beta l}{Y_0 + jY_R \tan \beta l}$$

$$Y_{in} = \frac{\frac{Y_R}{Y_0} + j \tan \beta l}{1 + j \frac{Y_R}{Y_0} \tan \beta l}$$

where $\frac{Y_S}{Y_0} = Y_{in}$ normalized input admittance

$$\frac{Y_R}{Y_0} = Y_r \text{ normalized load admittance}$$

$$Y_{in} = \frac{Y_r + j \tan \beta l}{1 + j Y_r \tan \beta l}$$

$$= \frac{Y_r + j \tan \beta l}{1 + j Y_r \tan \beta l} \frac{(1 - j Y_r \tan \beta l)}{(1 - j Y_r \tan \beta l)}$$

$$= \frac{Y_r - j Y_r^2 \tan \beta l + j \tan \beta l + Y_r \tan^2 \beta l}{1 + Y_r^2 \tan^2 \beta l}$$

$$= \frac{Y_r (1 + \tan^2 \beta l) + j (1 - Y_r^2) \tan \beta l}{1 + Y_r^2 \tan^2 \beta l}$$

For perfect matching $$Y_S = Y_0$$

$$\frac{Y_S}{Y_0} = 1$$

$$\therefore Y_{in} = 1$$

The stub has to be located at a point where the real part of Y_{in} is equal to unity

$$\therefore \quad \frac{Y_r(1 + \tan^2 \beta l_s)}{1 + Y_r^2 \tan^2 \beta l_s} = 1$$

$$Y_r + Y_r \tan^2 \beta l_s = 1 + Y_r^2 \tan^2 \beta l_s$$

$$Y_r \tan^2 \beta l_s - Y_r^2 \tan^2 \beta l_s = 1 - Y_r$$

$$\tan^2 \beta l_s (Y_r - Y_r^2) = 1 - Y_r$$

$$Y_r(1 - Y_r)\tan^2 \beta l_s = 1 - Y_r$$

$$Y_r \tan^2 \beta l_s = 1$$

$$\tan^2 \beta l_s = \frac{1}{Y_r}$$

$$\tan \beta l_s = \frac{1}{\sqrt{Y_r}} \quad \left(\because Y_r = \frac{Y_R}{R_0} \right)$$

$$= \sqrt{\frac{Y_0}{Y_R}}$$

$$\beta l_s = \tan^{-1} \sqrt{\frac{Y_0}{Y_R}}$$

$$\frac{2\pi}{\lambda} l_s = \tan^{-1}\sqrt{\frac{Y_0}{Y_R}}$$

The location of the stub l_s is given by

$$l_s = \frac{\lambda}{2\pi}\tan^{-1}\sqrt{\frac{Z_R}{Z_0}} \quad [\because Z_R = \frac{1}{Y_R}; Z_0 = \frac{1}{Y_0}]$$

The susceptance at the location of the stub is

$$\frac{S_s}{Y_0} = \frac{(1 - Y_r^2)\tan\beta l_s}{1 + Y_r^2 \tan^2\beta l_s}$$

$$= \frac{(1 - Y_r^2)\sqrt{\frac{Y_0}{Y_R}}}{1 + Y_r^2 \frac{Y_0}{Y_R}}$$

$$= \frac{\left(1 - \frac{Y_R^2}{Y_0^2}\right)\sqrt{\frac{Y_0}{Y_R}}}{1 + \frac{Y_R^2}{Y_0^2}\,\frac{Y_0}{Y_R}}$$

$$= \frac{\left(1 - \frac{Y_R^2}{Y_0^2}\right)\sqrt{\frac{Y_0}{Y_R}}}{1 + \frac{Y_R}{Y_0}}$$

$$= \left(1 - \frac{Y_R}{Y_0}\right)\sqrt{\frac{Y_0}{Y_R}}$$

$$= \frac{Y_0 - Y_R}{Y_0}\sqrt{\frac{Y_0}{Y_R}}$$

The susceptance of the stub is

$$S_s = (Y_0 - Y_R)\sqrt{\frac{Y_0}{Y_R}}$$

This can be obtained either by an open circuited or short circuited stub. But normally short circuited stub is preferred because of the following advantages.

(*i*) it radiates less power.

(*ii*) its effective length may be varied by means of a shorting bar.

The susceptance of a short circuited stub is equated to $Y_0 \cot \beta l_t$

$$(Y_0 - Y_R)\sqrt{\frac{Y_0}{Y_R}} = Y_0 \cot \beta l_t$$

$$\frac{Y_0 - Y_R}{Y_0}\sqrt{\frac{Y_0}{Y_R}} = \cot \beta l_t$$

$$\cot \beta l_t = (Y_0 - Y_R)\frac{1}{\sqrt{Y_0 Y_R}}$$

$$= \frac{Z_R - Z_0}{Z_R Z_0}\sqrt{Z_0 Z_R} = \frac{Z_R - Z_0}{\sqrt{Z_R Z_0}}$$

$$\tan \beta l_t = \frac{\sqrt{Z_R Z_0}}{Z_R - Z_0}$$

$$\beta l_t = \tan^{-1} \frac{\sqrt{Z_0 Z_R}}{Z_R - Z_0}$$

The length of the stub is given by

$$l_t = \frac{\lambda}{2\pi} \tan^{-1} \left[\frac{\sqrt{Z_R Z_0}}{Z_R - Z_0} \right]$$

Location and length of the Stub using Reflection Coefficient

The input impedance of the line is given by

$$Z_i = Z_0 \frac{1 + K e^{-2\gamma l}}{1 - K e^{-2\gamma l}}$$

For lossless line $\alpha = 0$, $\gamma = j\beta$ and $K = |K| e^{j\phi}$

where ϕ is the angle of reflection coefficient.

$$Z_i = Z_0 \frac{1 + |K| e^{j\phi} e^{-j2\beta l}}{1 - |K| e^{j(\phi - 2\beta l)}}$$

$$= Z_0 \frac{1 + |K| e^{j(\phi - 2\beta l)}}{1 - |K| e^{j\phi} e^{-j2\beta l}}$$

The input admittance is given by

$$Y_i = G_0 \frac{1 - |K| e^{j(\phi - 2\beta l)}}{1 + |K| e^{j(\phi - 2\beta l)}}$$

where the characteristic conductance is

$$G_0 = \frac{1}{Z_0} = \frac{1}{R_0} \qquad [\because Z_0 \text{ is resistive}]$$

$$Y_i = G_0 \frac{1 - |K| [\cos(\phi - 2\beta l) + j \sin(\phi - 2\beta l)]}{1 + |K| [\cos(\phi - 2\beta l) + j \sin(\phi - 2\beta l)]}$$

$$= G_0 \frac{1 - |K| [\cos(\phi - 2\beta l) - j |K| \sin(\phi - 2\beta l)]}{1 + |K| [\cos(\phi - 2\beta l) + j |K| \sin(\phi - 2\beta l)]}$$

Multiplying the numerator and denominator by

$$1 + |K| [\cos(\phi - 2\beta l) - j\,|K| \sin(\phi - 2\beta l)$$

$$Y_i = G_0 \frac{1 - |K|^2 - 2j\,|K| \sin(\phi - 2\beta l)}{1 + |K|^2 + 2\,|K| \cos(\phi - 2\beta l)}$$

Since $Y_i = G_i + j\,S_i$, then

$$\frac{Y_i}{G_0} = \frac{G_i}{G_0} + \frac{j\,S_i}{G_0} = \frac{1 - |K|^2 - 2j\,|K| \sin(\phi - 2\beta l)}{1 + |K|^2 + 2\,|K| \cos(\phi - 2\beta l)}$$

Equating the real parts

$$\frac{G_i}{G_0} = \frac{1 - |K|^2}{1 + |K|^2 + 2\,|K| \cos(\phi - 2\beta l)}$$

Equating the imaginary parts

$$\frac{S_i}{G_0} = \frac{-2\,|K|\sin(\phi - 2\beta\, l)}{1 + |K|^2 + 2\,|K|\cos(\phi - 2\beta\, l)}$$

At the location of stub $Z_i = Z_0$ for matching.

Since there is no reflection, $l = l_s$

$$\therefore\ G_i = G_0$$

$$\frac{G_i}{G_0} = 1$$

$$\frac{1 - |K|^2}{1 + |K|^2 + 2\,|K|\cos(\phi - 2\beta\, l_s)} = 1$$

$$1 - |K|^2 = 1 + |K|^2 + 2\,|K|\cos(\phi - 2\beta\, l_s)$$

$$2\,|K|\cos(\phi - 2\beta\, l_s) = -2\,|K|^2$$

$$\cos(\phi - 2\beta\, l_s) = -|K|$$

$$\phi - 2\beta\, l_s = \cos^{-1}(-|K|)$$

But $\cos^{-1}(-|K|) = -\pi + \cos^{-1}|K|$

$$\therefore \quad \phi - 2\beta\, l_s = -\pi + \cos^{-1}|K|$$

$$2\beta\, l_s = \phi + \pi - \cos^{-1}|K|$$

$$l_s = \frac{\phi + \pi - \cos^{-1}|K|}{2\beta}$$

or $$l_s = \frac{\lambda}{4\pi}\left[\phi + \pi - \cos^{-1}|K|\right] \qquad \left[\because \beta = \frac{2\pi}{\lambda}\right]$$

The normalized susceptance (imaginary part) equation is

$$\frac{S_i}{G_0} = \frac{-2\,|K|\,\sin(\phi - 2\beta\, l)}{1 + |K|^2 + 2\,|K|\cos(\phi - 2\beta\, l)}$$

But $(\phi - 2\beta\, l_s) = -\pi + \cos^{-1}|K|$ and

$$\cos(\phi - 2\beta\, l_s) = -|K|$$

$$\therefore \quad \frac{S_i}{G_0} = \frac{-2\,|K|\,\sin(-\pi + \cos^{-1}|K|)}{1 + |K|^2 + 2\,|K|\,(-|K|)}$$

$$= \frac{2\,|K|\,\sin(\cos^{-1}|K|)}{1 + |K|^2 - 2\,|K|^2}$$

Let $\cos^{-1}|K| = \theta$, then $|K| = \cos\theta$

$$\sin(\cos^{-1}|K|) = \sin\theta = \sqrt{1 - \cos^2\theta} = \sqrt{1 - |K|^2}$$

$$\therefore \quad \frac{S_i}{G_0} = \frac{2|K|\sqrt{1-|K|^2}}{1-|K|^2}$$

$$S_i = G_0 \frac{2|K|}{\sqrt{1-|K|^2}}$$

The susceptance of the stub is $G_0 \cot \beta l_t$

$$G_0 \cot \beta l_t = G_0 \frac{2|K|}{\sqrt{1-|K|^2}}$$

$$\frac{1}{\tan \beta l_t} = \frac{2|K|}{\sqrt{1-|K|^2}}$$

$$\tan \beta l_t = \frac{\sqrt{1-|K|^2}}{2|K|}$$

$$\beta l_t = \tan^{-1} \frac{\sqrt{1 - |K|^2}}{2|K|}$$

$$l_t = \frac{1}{\beta} \tan^{-1} \frac{\sqrt{1 - |K|^2}}{2|K|}$$

$$l_t = \frac{\lambda}{2\pi} \tan^{-1} \frac{\sqrt{1 - |K|^2}}{2|K|}$$

The location of the stub 'l_s' and length of the stub 'l_t' can be determined, if the reflection coefficient and frequency are known.

A short circuited stub is normally preferred to an open circuited stub

However the single stub matching has the following drawbacks.

(*i*) Single stub matching is applicable for single frequency. For variable frequency the location of the stub is not fixed (*i.e.*, changing).

(*ii*) For final adjustment the stub has to be moved along the line slightly. So, it is possible only in open wire lines.

To avoid the disadvantages of single matching, double stub matching is introduced. Double stub matching is one in which two short circuited stubs spacing $\lambda/4$, whose lengths are adjustable independently are fixed as shown in Fig.3.8.

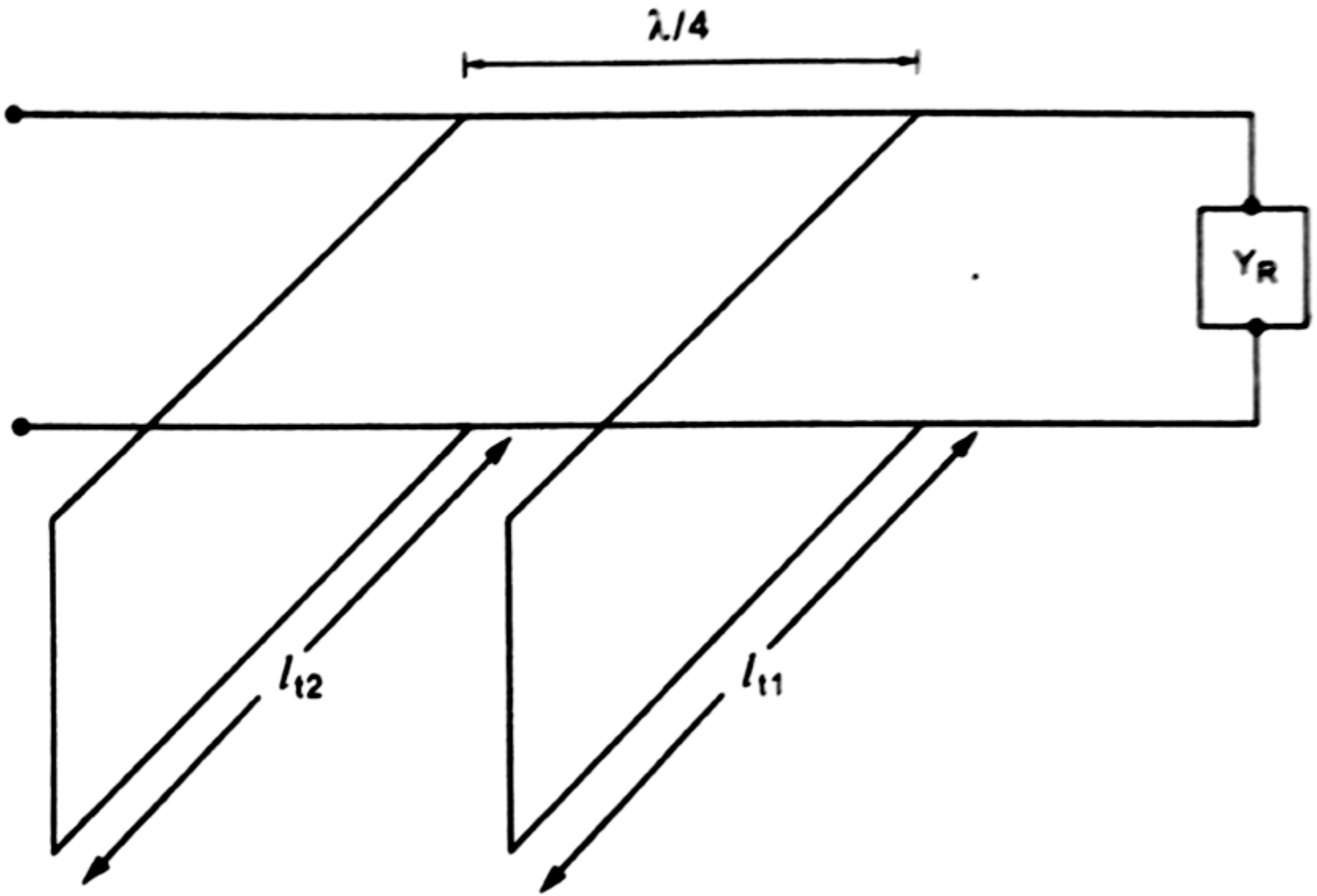

Double stub matching

Circle Diagram

The input impedance for the transmission line is given by

$$Z_S = \frac{V}{I} = \frac{\dfrac{V_R(Z_R + Z_0)}{2Z_R}\left[e^{\gamma x} + K e^{-\gamma x}\right]}{\dfrac{I_R(Z_R + Z_0)}{2Z_0}\left[e^{\gamma x} - K e^{-\gamma x}\right]}$$

$$= \frac{V_R Z_0 \left[e^{\gamma x} + K e^{-\gamma x}\right]}{I_R Z_R \left[e^{\gamma x} - K e^{-\gamma x}\right]}$$

$$= \frac{V_R Z_0 e^{\gamma x}[1 + K e^{-2\gamma x}]}{V_R e^{\gamma x}[1 - K e^{-2\gamma x}]}$$

$$= Z_0 \frac{[1 + K e^{-2\gamma x}]}{[1 - K e^{-2\gamma x}]}$$

The input impedance of the transmission line is given by

$$Z_S = Z_0 \frac{1 + K e^{-2\gamma x}}{1 - K e^{-2\gamma x}}$$

For a lossless line $\gamma = j\beta$ $(\therefore \alpha = 0)$

The normalised input impedance is obtained by dividing Z_S by its characteristic impedance Z_0.

$$Z_{in} = \frac{Z_S}{Z_0} = \frac{1 + K e^{-j2\beta x}}{1 - K e^{-j2\beta x}}$$

$$Z_{in}(1 - K e^{-j2\beta x}) = 1 + K e^{-j2\beta x}$$

$$Z_{in} - Z_{in} K e^{-j2\beta x} = 1 + K e^{-j2\beta x}$$

$$Z_{in} - 1 = K e^{-j2\beta x}(1 + Z_{in})$$

$$K e^{-j2\beta x} = \frac{Z_{in} - 1}{Z_{in} + 1}$$

But Z_{in} is a complex quantity. It can be represented by

$$Z_{in} = R + jX$$

where R is the resistance, X is the reactance

$$K e^{-j2\beta x} = \frac{R + jX - 1}{R + jX + 1} = \frac{(R-1) + jX}{(R+1) + jX}$$

The above equation leads to two sets of circles. They are S circles and βx circle. S circles can be obtained by equating the magnitude and βx circles by equating the tangents of the angles.

$$K e^{-j2\beta x} = \left(\frac{(R-1) + jX}{(R+1) + jX}\right)\left(\frac{(R+1) - jX}{(R+1) - jX}\right)$$

$$= \frac{R^2 - 1 + jX(R+1) - jX(R-1) + X^2}{(R+1)^2 + X^2}$$

$$= \frac{R^2 - 1 + X^2}{(R+1)^2 + X^2} + j\frac{2X}{(R+1)^2 + X^2}$$

By converting rectangular co-ordinates in to polar co-ordinates

$$K\, e^{-j2\beta x} = \sqrt{\frac{(R-1)^2 + X^2}{(R+1)^2 + X^2}} \tan^{-1}\left[\frac{\dfrac{2X}{(R+1)^2 + X^2}}{\dfrac{R^2 - 1 + X^2}{(R+1)^2 + X^2}}\right]$$

Constant S circles are obtained by equating the magnitude

$$K^2 = \frac{(R-1)^2 + X^2}{(R+1)^2 + X^2}$$

$$K^2 (R+1)^2 + K^2 X^2 = (R-1)^2 + X^2$$

$$K^2 (R^2 + 2R + 1) + K^2 X^2 = R^2 + 1 - 2R + X^2$$

$$K^2 (R^2 + X^2 + 2R + 1) = R^2 + X^2 - 2R + 1$$

$$K^2R^2 + K^2X^2 + 2K^2R + K^2 - R^2 - X^2 + 2R - 1 = 0$$

$$R^2 (K^2 - 1) + X^2 (K^2 - 1) + 2 R (K^2 + 1) + K^2 - 1 = 0$$

Divide by $K^2 - 1$,

$$R^2 + X^2 + 2R \left(\frac{K^2 + 1}{K^2 - 1} \right) + 1 = 0$$

The reflection coefficient can be written in terms of the standing wave ratio.

$$|K| = \frac{S - 1}{S + 1}$$

$$\frac{K^2 + 1}{K^2 - 1} = \frac{\left(\frac{S - 1}{S + 1} \right)^2 + 1}{\left(\frac{S - 1}{S + 1} \right)^2 - 1} = \frac{(S - 1)^2 + (S + 1)^2}{(S - 1)^2 - (S + 1)^2}$$

$$= \frac{S^2 - 2S + 1 + S^2 + 2S + 1}{S^2 - 2S + 1 - S^2 - 2S - 1}$$

$$= \frac{2\,(S^2 + 1)}{-4S}$$

$$\frac{K^2 + 1}{K^2 - 1} = -\frac{(S^2 + 1)}{2S}$$

Substituting this value in the main equation

$$R^2 + X^2 - 2\,R\,\frac{(S^2 + 1)}{2S} + 1 = 0$$

Adding $\left(\frac{(S^2 + 1)}{2S}\right)^2$ **on both sides**

$$R^2 - 2R\frac{(S^2+1)}{2S} + \left(\frac{(S^2+1)}{2S}\right)^2 + X^2 = -1 + \left(\frac{(S^2+1)}{2S}\right)^2$$

$$\left[R - \frac{(S^2+1)}{2S}\right]^2 + X^2 = \frac{-4S^2 + S^4 + 2S^2 + 1}{4S^2}$$

$$= \frac{S^4 - 2S^2 + 1}{4S^2}$$

$$= \left(\frac{S^2-1}{2S}\right)^2$$

$$\left[R - \frac{(S^2+1)}{2S}\right]^2 + X^2 = \left(\frac{S^2-1}{2S}\right)^2$$

This is the equation of the S circles whose radius is

$$\frac{S^2 - 1}{2S} = \frac{S - \frac{1}{S}}{2}$$

centre is $$\frac{S^2 + 1}{2S} = \frac{S + \frac{1}{S}}{2}$$

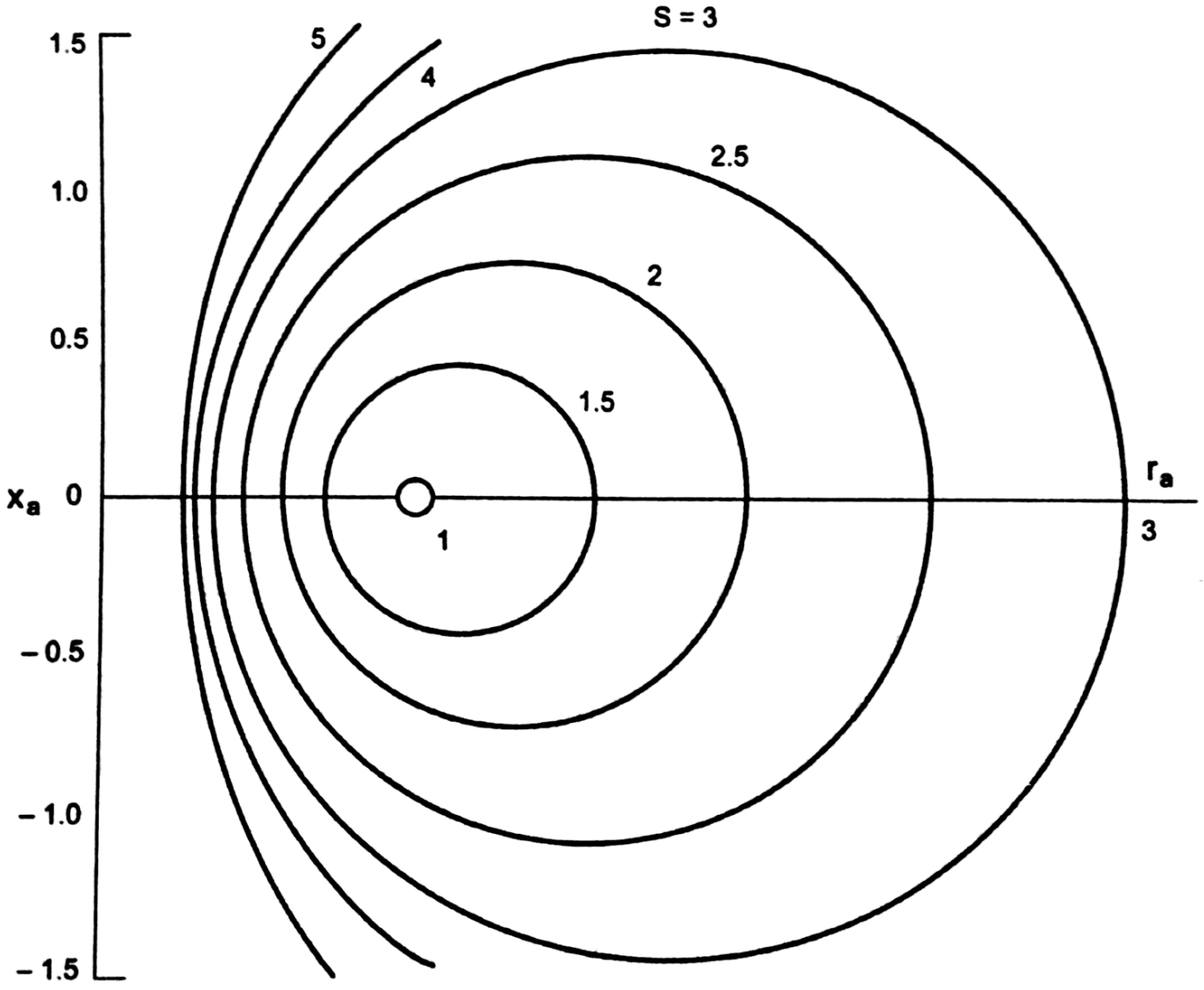

A family of constant – S circles

The constant βx circles are obtained by equating it to the tangent of angle

$$-2\beta x = \tan^{-1}\left[\frac{\dfrac{2X}{(R+1)^2+R^2}}{\dfrac{R^2-1+X^2}{(R+1)^2+X^2}}\right]$$

Taking tangent on both sides

$$\tan(-2\beta x) = \left[\frac{2X}{R^2-1+X^2}\right]$$

$$-\tan(2\beta x) = \frac{2X}{R^2-1+X^2}$$

$$R^2+X^2-1 = -\frac{2X}{\tan 2\beta x}$$

$$R^2 + X^2 - 1 + \frac{2X}{\tan 2\beta x} = 0$$

Adding $\frac{1}{\tan^2 2\beta x}$ on both sides

$$R^2 + X^2 + \frac{1}{\tan^2 2\beta x} + \frac{2X}{\tan 2\beta x} = 1 + \frac{1}{\tan^2 2\beta x}$$

$$R^2 + \left(X + \frac{1}{\tan 2\beta x}\right)^2 = 1 + \frac{1}{\tan^2 2\beta x}$$

But $\quad 1 + \frac{1}{\tan^2 2\beta x} = \frac{1}{\sin^2 2\beta x}$

$$R^2 + \left(X + \frac{1}{\tan 2\beta x} \right)^2 = \frac{1}{\sin^2 2\beta x}$$

This is the equation of βx circle whose radius is $\frac{1}{\sin 2\beta x}$ and the centre is $\frac{1}{\tan 2\beta x}$.

Though the circle diagram is very useful in calculating the line impedance and admittance it has the following drawbacks.

- S and βx are not concentric, making interpolation difficult.
- Only a limited range of impedance values can be accommodated in a chart of reasonable size.

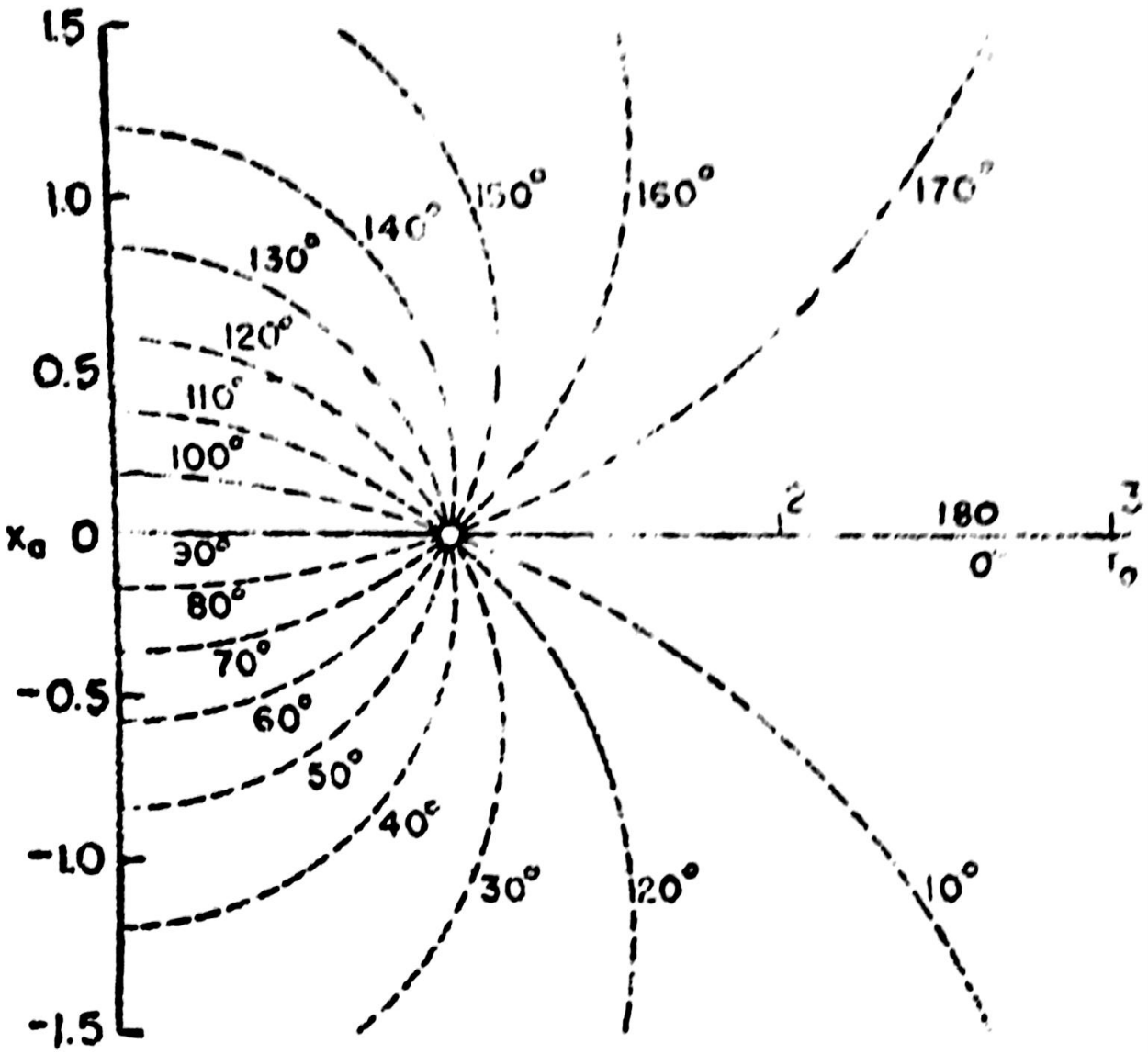

A family of constant β x circles

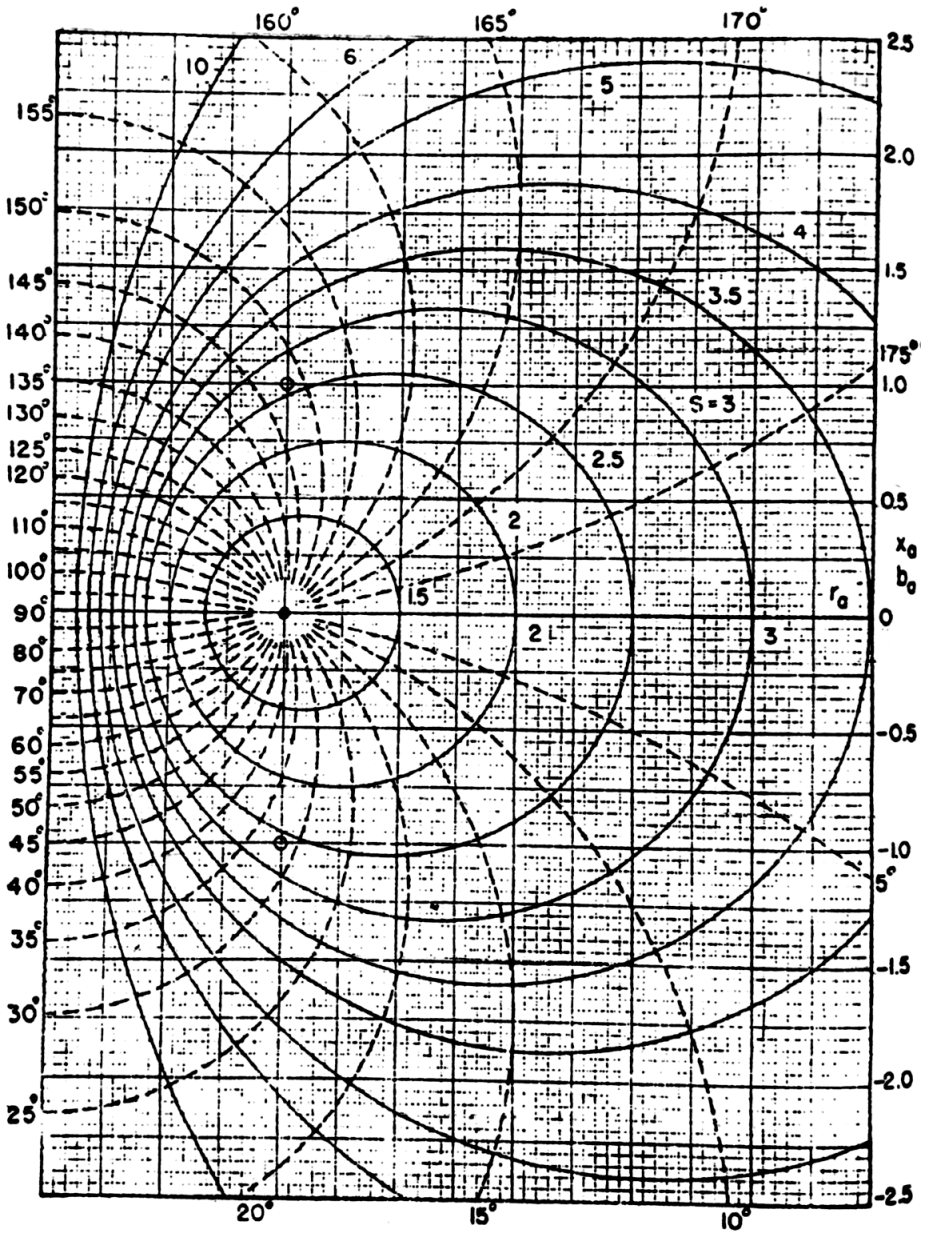

The transition – line circle diagram

SMITH CHART

"Smith Chart is a special polar diagram containing constant resistance circles, constant reactance circles, circles of constant standing wave ratio and radius lines representing line-angle loci; used in solving transmission line and waveguide problems".

The basic difference between circle diagram and Smith Chart is that in the circle diagram the impedance is represented in a rectangular form while in the Smith Chart the impedance is represented in a circular form.

The Smith Chart is obtained as follows.

To display the impedance of all possible passive networks the graph must extend in all three possible directions (R, $+jX$, $-jX$). The Smith Chart is committed to a bilinear transformation by plotting the complex reflection coefficient.

$$K = \frac{Z_R - Z_0}{Z_R + Z_0}$$

By normalizing the load impedance $z = \frac{Z_R}{Z_0}$

$$K = \frac{\frac{Z_R}{Z_0} - 1}{\frac{Z_R}{Z_0} + 1}$$

$$= \frac{z - 1}{z + 1}$$

$$(z + 1)K = z - 1$$

$$zK + K = z - 1$$

$$1 + K = z(1 - K)$$

$$z = \frac{1 + K}{1 - K}$$

Since the complex quantity $z = R + jX$ and the complex quantity $K = K_R + jK_X$

$$R + jX = \frac{1 + K_R + jK_X}{1 - K_R - jK_X}$$

$$= \frac{(1 + K_R) + jK_X}{(1 - K_R) - jK_X}$$

$$= \frac{[(1 + K_R) + jK_X]\,[(1 - K_R) + jK_X]}{[(1 - K_R) - jK_X]\,[(1 - K_R) + jK_X]}$$

$$= \frac{1 + \cancel{K_R} + jK_X - \cancel{K_R} - K_R^2 - j\cancel{K_R}K_X + jK_X + j\cancel{K_R}K_X - K_X^2}{(1 - K_R)^2 + K_X^2}$$

$$R + jX = \frac{1 - K_R^2 - K_X^2 + 2jK_X}{(1 - K_R)^2 + K_X^2}$$

Equating the real parts on both sides

$$R = \frac{1 - K_R^2 - K_X^2}{(1 - K_R)^2 + K_X^2}$$

Equating the imaginary parts on both sides

$$X = \frac{2K_X}{(1 - K_R)^2 + K_X^2}$$

The real parts $R = \dfrac{1 - K_R^2 - K_X^2}{(1 - K_R)^2 + K_X^2}$

$$R(1-K_R)^2 + R\,K_X^2 = 1 - K_R^2 - K_X^2$$

$$R(1-2K_R+K_R^2) + R\,K_X^2 = 1 - K_R^2 - K_X^2$$

$$R - 2R\,K_R + R\,K_R^2 + R\,K_X^2 = 1 - K_R^2 - K_X^2$$

(or) $$\cancel{-2R\,K_R + R\,K_R^2 + R\,K_X^2 + K_R^2 + K_X^2 = 1 - R}$$

$$K_R^2 + R\,K_R^2 + K_X^2 + R\,K_X^2 - 2R\,K_R = 1 - R$$

$$K_R^2(1+R) + K_X^2(1+R) - 2R\,K_R = 1 - R$$

$$K_R^2 + K_X^2 - \frac{2R\,K_R}{1+R} = \frac{1-R}{1+R}$$

$$\left(K_R - \frac{R}{1+R}\right)^2 - \frac{R^2}{(1+R)^2} + K_X^2 = \frac{1-R}{1+R}$$

$$\left(K_R - \frac{R}{1+R}\right)^2 + K_X^2 = \frac{1-R}{1+R} + \frac{R^2}{(1+R)^2}$$

$$= \frac{(1-R)(1+R)+R^2}{(1+R)^2}$$

$$= \frac{1-\cancel{R^2}+\cancel{R^2}}{(1+R)^2}$$

$$\left(K_R - \frac{R}{1+R}\right)^2 + K_X^2 = \frac{1}{(1+R)^2}$$

This equation represents a family of constant R circles having centres on the R axis at, $\left[\frac{R}{R+1}, 0\right]$ and radius of $\frac{1}{R+1}$. This is shown in Fig.3.12.

Circles of Constant – R

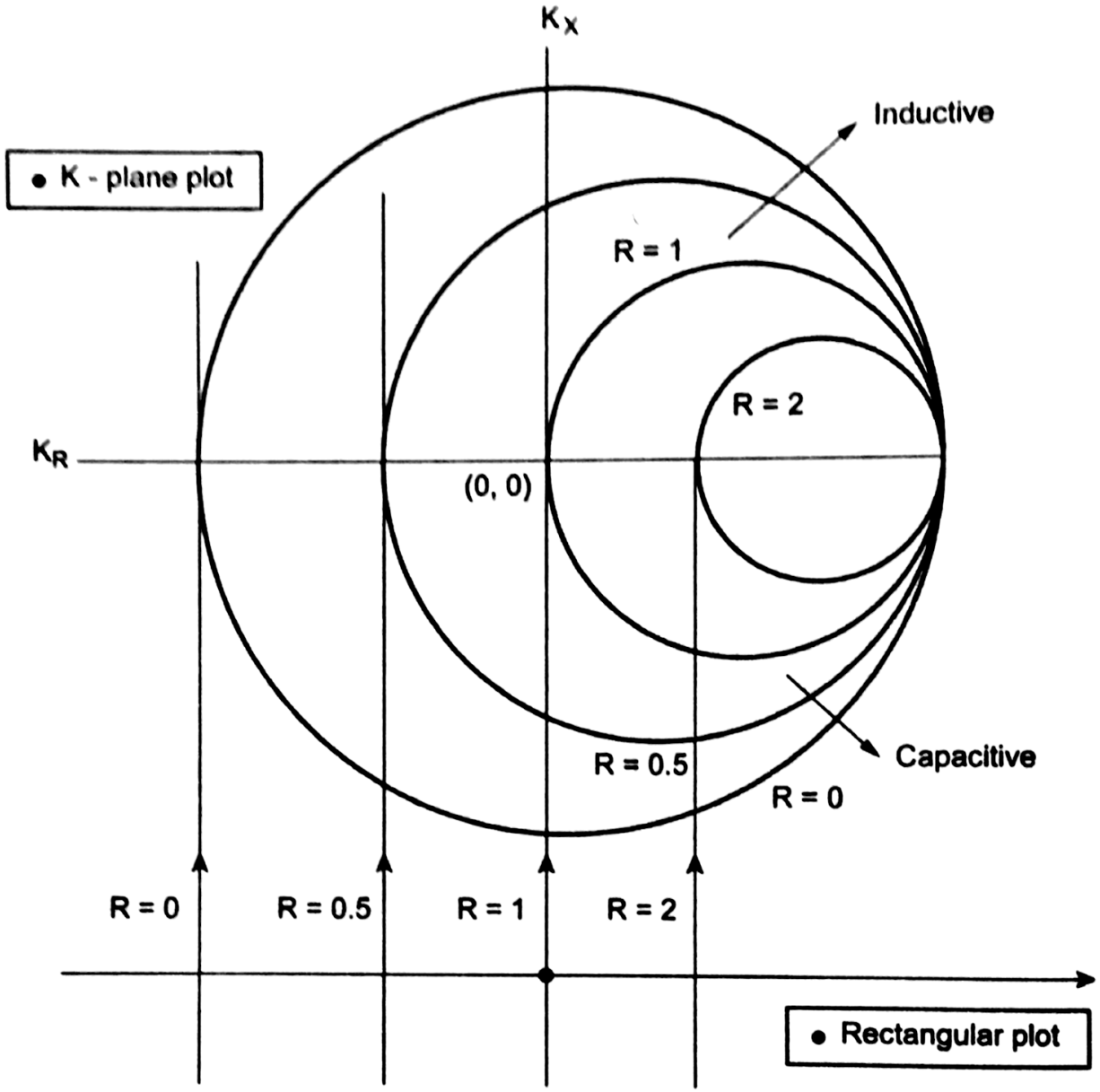

The imaginary parts $$X = \frac{2K_X}{(1-K_R)^2 + K_X^2}$$

$$X\,[1 + K_R^2 - 2K_R + K_X^2] = 2K_X$$

Dividing by X

$$1 + K_R^2 - 2K_R + K_X^2 - \frac{2K_X}{X} = 0$$

$$(K_R - 1)^2 + K_X^2 - \frac{2K_X}{X} = 0$$

Adding $\frac{1}{X^2}$ on both sides, $$(K_R - 1)^2 + K_X^2 - \frac{2K_X}{X} + \frac{1}{X^2} = \frac{1}{X^2}$$

$$(K_R - 1)^2 + \left[K_X - \frac{1}{X}\right]^2 = \frac{1}{X^2}$$

This equation represents a family of constant X circles having centres at (1, 1/X) and radii of $\frac{1}{X}$. This is shown in Fig.3.13.

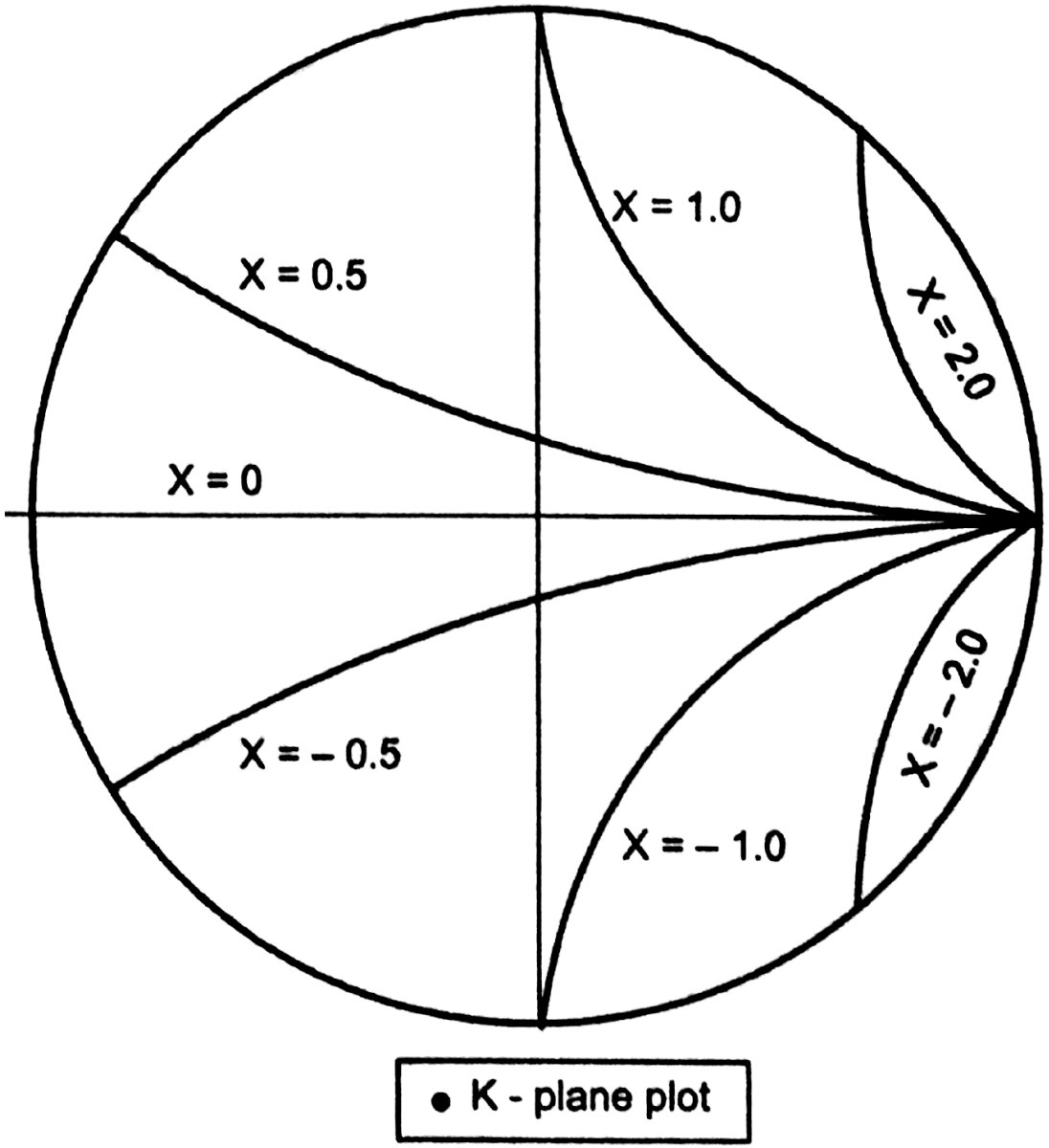

Family of constant X circles

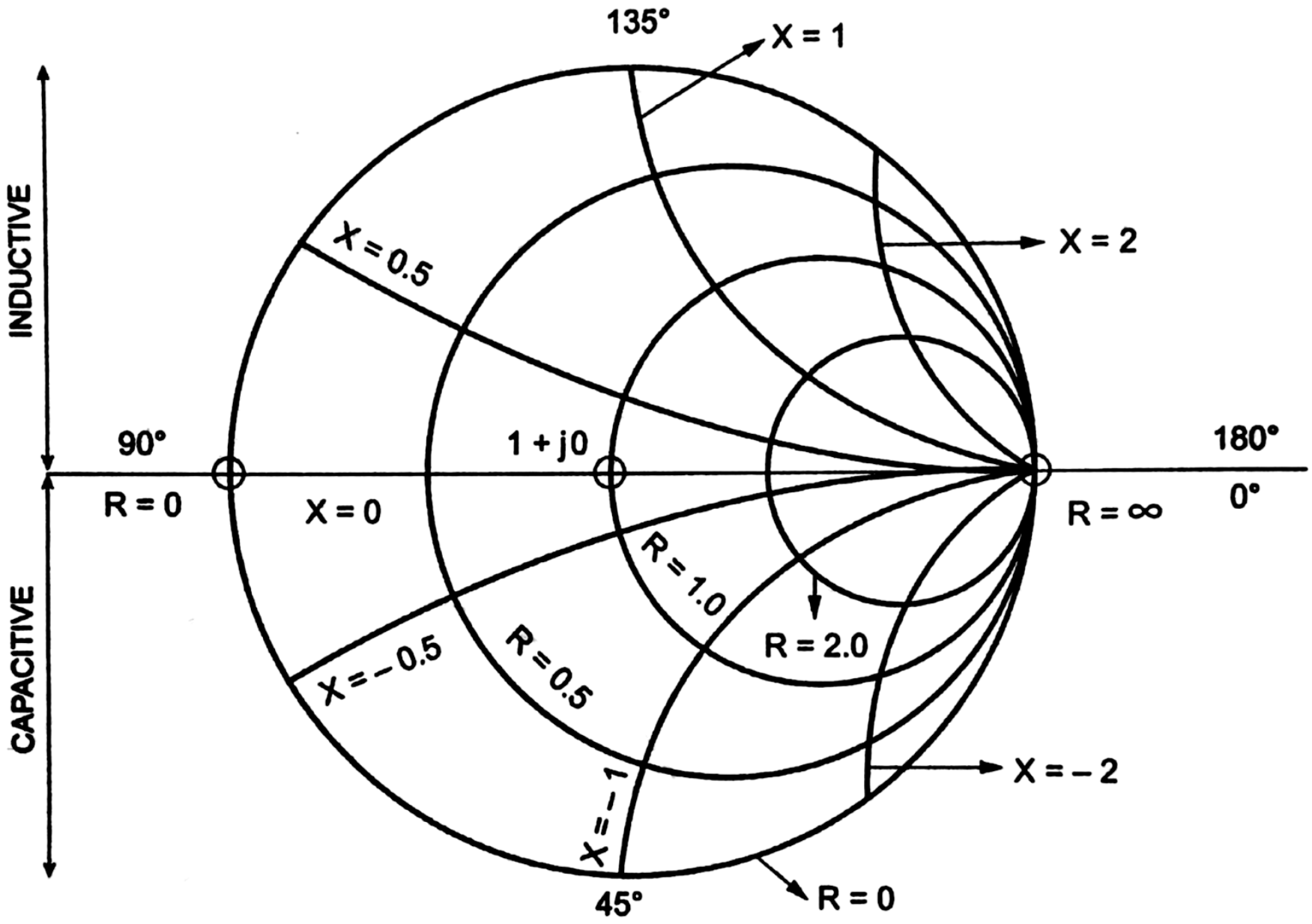

Smith circle diagram

. **Design a quarter wave transformer to match a load of 200 Ω to a source resistance of 500 Ω, operating at a frequency of 200 MHz.** **[Nov/Dec 2006]**

Solution: Given $Z_R = 200\Omega$, $Z_S = 500\Omega$, $f = 200MHz$

$$Z_s = \frac{R_0^2}{Z_R}$$

$$R_0 = \sqrt{Z_S \cdot Z_R}$$

$$= \sqrt{(500)(200)}$$

$$= 316.22\,\Omega$$

Input impedance of $\frac{\lambda}{4}$ transformer $\Rightarrow$ $R_0 = 316.22\ \Omega$.

The frequency of operation is $f = 200$ MHz.

Wavelength $\lambda = \dfrac{C}{f} = \dfrac{3\times10^8}{200\times10^6} = 1.5$ m.

The length of the quarter wave line $s = \dfrac{\lambda}{4}$

$$s = \frac{\lambda}{4} = \frac{1.5}{4} = 0.375 \text{ m}$$

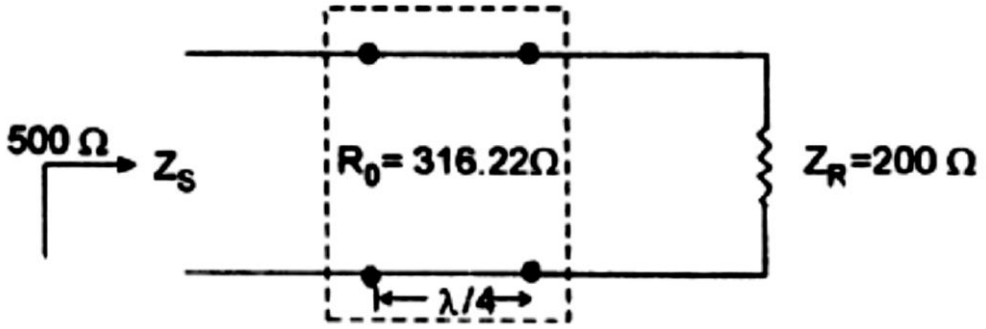

Determine the length and impedance of a quarter wave transformer that will match a 150Ω load to a 75Ω line at a frequency of 12 GHz.

Solution: Given $Z_R = 150\Omega$ $Z_S = 75\Omega$ $f = 12GHz$

$$R_o = \sqrt{Z_S \cdot Z_R} = \sqrt{75 \times 150} = \sqrt{11250}\,\Omega = 106.0660\,\Omega$$

Frequency = 12 GHz

$$C = f\lambda$$

$$\lambda = \frac{C}{f} = \frac{3 \times 10^8}{12 \times 10^9} = 0.025 \text{ m} = 25 \text{ cm.}$$

The length of the quarter wave transformer $= S = \dfrac{\lambda}{4} = 6.25$ cm

Stub Matching

accomplishing impedance matching is the use of an open or short circuited line of suitable length, called stub at a designated distance from the load. This is called stub matching. There are two types of stub matching. They are:

(*i*) Single stub matching

(*ii*) Double stub matching

- Single Stub Matching:

For greatest efficiency and delivered power, a high frequency transmission line should be operate as a smooth line (or) with an R_0 termination.

The quarter wave line or transformer is used as impedance matching devices.

Another means of achieving this is the use of an open or closed stub line of suitable length as reactance shunted across the transmission line at a designated distance from the load.

The input impedance of the line is 1 / SR0 at a voltage maximum

S / R0 at voltage minimum.

At intermediate point A the real part of the input impedance is 1 / R0 or the input admittance at A is

$$Y_s = \frac{1}{R_0} \pm jB.$$

The susceptance B is the shunt value at that point.

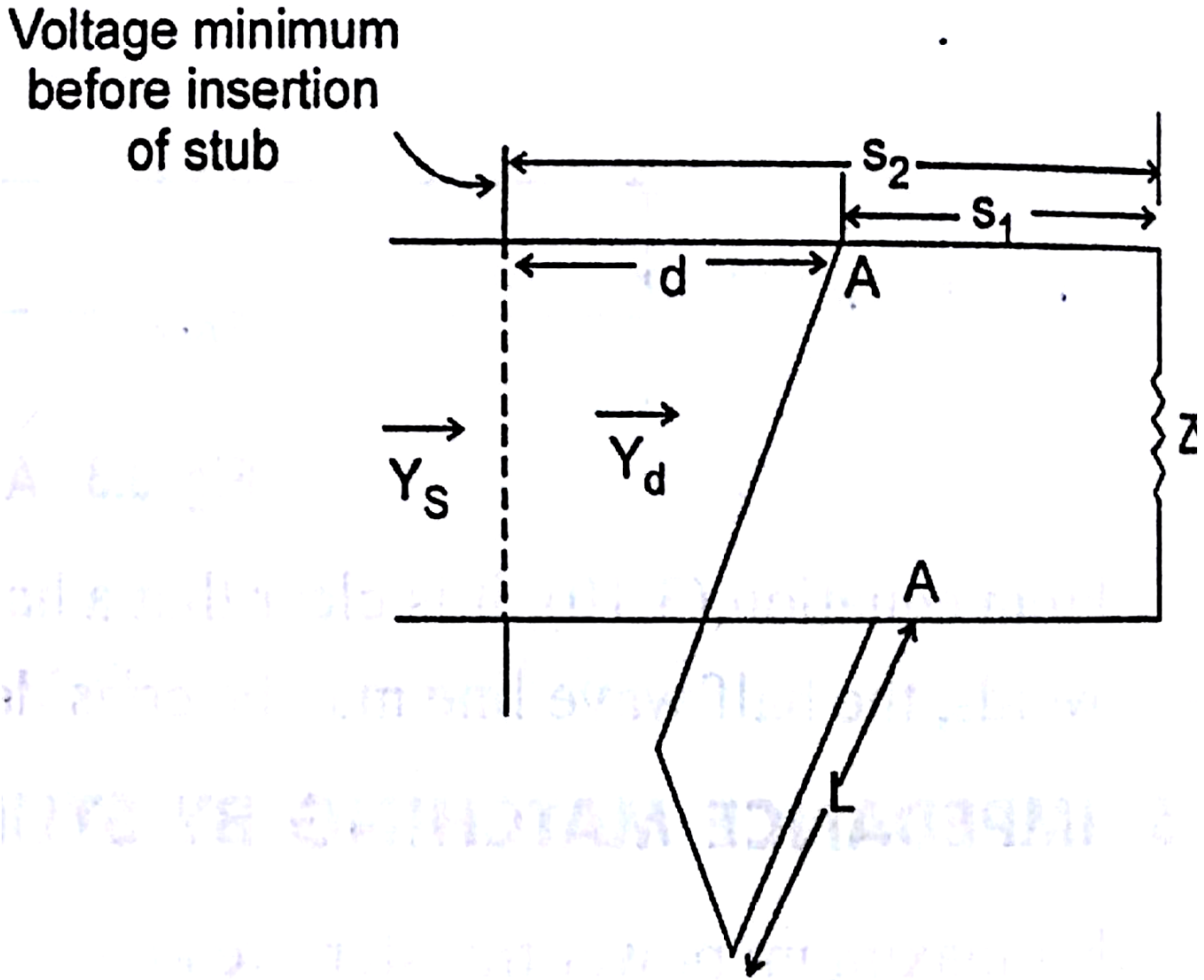

Location of Single Stub for Impedance Matching

After the point having conductance equal to $1/R_0$ is located, a short stub line having input susceptance of $\mp B$ may be connected across the transmission line.

The input admittance at this point is given by,

$$Y_s = \frac{1}{R_0} \pm jB \mp jB = \frac{1}{R_0}$$

The input impedance of the transmission line at point A looking towards the load is:

$$Z_s = R_0$$

The input admittance Y_s, looking towards the load from any point on the line, may be written as:

$$Y_s = \frac{1}{Z_S} = \frac{1}{R_0}\left(\frac{1-|K|\angle\phi-2\beta s}{1+|K|\angle\phi-2\beta s}\right)$$

$G_0 = \dfrac{1}{R_0}$ and changing to rectangular coordinates,

$$Y_s = G_o \left[\frac{1 - |K| \cos(\phi - 2\beta s) - j|K| \sin(\phi - 2\beta s)}{1 + |K| \cos(\phi - 2\beta s) + j|K| \sin(\phi - 2\beta s)} \right]$$

multiplying the numerator and denominator by

$$1 + |K| \cos(\phi - 2\beta s) - j|K| \sin(\phi - 2\beta s)$$

$$Y_s = G_o \left[\frac{1 - |K|^2 - 2j|K| \sin(\phi - 2\beta s)}{1 + |K|^2 + 2|K| \cos(\phi - 2\beta s)} \right] = G_s + jB_s.$$

Expressing the shunt conductance as a dimensionless ratio $\dfrac{G_S}{G_0}$ or on a per unit basis,

Equating the real parts

$$\frac{G_S}{G_0} = \left[\frac{1-|K|^2}{1+|K|^2+2|K|\cos(\phi-2\beta s)}\right]$$

the shunt susceptance on a per unit basis is.

Equating the imaginary parts

$$\frac{B_S}{G_0} = \left[\frac{-2|K|\sin(\phi-2\beta s)}{1+|K|^2+2|K|\cos(\phi-2\beta s)}\right]$$

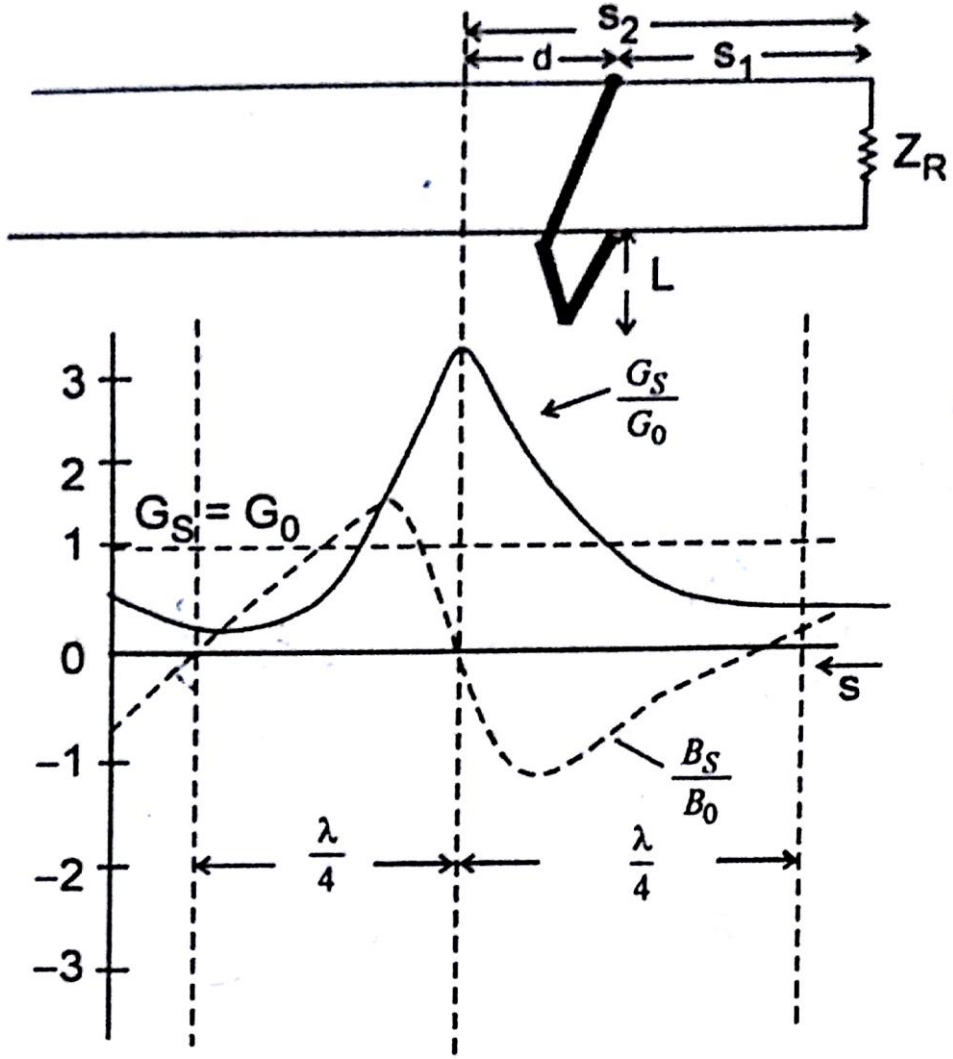

Admittance conditions on a line indicating proper location of the stub for |K| = 0.5

The value of $\frac{G_S}{G_0}$ has a maximum and this maximum occurs for the value s_2 at which the cosine term is -1 (or) $\phi - 2\beta s_2 = -\pi$,

$$\phi - 2\beta s_2 = -\pi$$

$$s_2 = \frac{\phi + \pi}{2\beta}$$

At a distance s_2 from the load,

$$\frac{G_S}{G_0} = \frac{1-|K|^2}{1+|K|^2-2|K|} = \frac{(1+|K|)(1-|K|)}{(1-|K|)^2}$$

$$\frac{G_S}{G_0} = \frac{1+|K|}{1-|K|} = S$$

Since this equation states that $R_s = \frac{R_0}{S}$, the point of maximum $\frac{G_S}{G_0}$ is recognized as a point of minimum voltage, at a distance s_2 from the load.

At a distance s_1 from the load it can be seen that $G_s = G_0$. This is the point at which the stub is to be connected and the value of G_S / G_0 is unity at that point.

$$1 = \frac{1-|K|^2}{1+|K|^2+2|K|\cos(\phi-2\beta s_1)}$$

$$1 + |K|^2 + 2|K| \cos(\phi - 2\beta s_1) = 1 - |K|^2$$

$$\cos(\phi - 2\beta s_1) = -|K|$$

$$\cos^{-1}(-|K|) = \phi - 2\beta s_1$$

Since $\cos^{-1}(-K) = -\pi + \cos^{-1}|K|$

$$\phi - 2\beta s_1 = -\pi + \cos^{-1}|K|$$

$$s_1 = \frac{\phi + \pi - \cos^{-1}|K|}{2\beta}, \text{ where } \beta = \frac{2\pi}{\lambda}$$

$$s_1 = \frac{\lambda}{4\pi}\left[\phi + \pi - \cos^{-1}|K|\right]$$

Hence the distance d from the voltage minimum to the point of stub connection is:

$$d = s_2 - s_1$$

$$d = \frac{\phi+\pi}{2\beta} - \left[\frac{\phi+\pi-\cos^{-1}|K|}{2\beta}\right]$$

$$d = \frac{\cos^{-1}|K|}{2\beta} = \frac{\cos^{-1}\left(\frac{S-1}{S+1}\right)}{2\cdot\frac{2\pi}{\lambda}} = \frac{\cos^{-1}\left(\frac{S-1}{S+1}\right)\frac{\lambda}{4}}{\pi}$$

The input susceptance of the line at the stub location nearest to the load can be obtained from equation

$$\frac{B_S}{G_0} = \left[\frac{-2|K|\sin(\phi-2\beta s)}{1+|K|^2+2|K|\cos(\phi-2\beta s)}\right]$$

$$\phi - 2\beta s_1 = -\pi + \cos^{-1}|K|$$

$$B_s = \dot{G}_0 \left[\frac{-2|K|\sin(-\pi+\cos^{-1}|K|)}{1+|K|^2+2|K|\cos(-\pi+\cos^{-1}|K|)} \right]$$

$$\cos\left(-\pi \pm \cos^{-1}|K|\right) = -|K|$$

Let $\cos^{-1}|K| = \theta$, then $|K| = \cos\theta$

$$\sin(\cos^{-1}|K|) = \sin\theta = \sqrt{1-\cos^2\theta} = \sqrt{1-|K|^2}$$

$$\sin\left(-\pi \pm \cos^{-1}|K|\right) = \pm\sqrt{1-K^2}$$

$$B_s = G_0 \left(\frac{2|K|\sqrt{1-k^2}}{1+|K|^2-2|K|^2} \right)$$

$$B_s = G_0 \left(\frac{2|K|\sqrt{1-k^2}}{1-|K|^2} \right)$$

The susceptance of the short circuited stub is

$$B_{sc} = -\ G_0 \ \cot \beta L = \frac{-G_0}{\tan \beta L}$$

where L is the length of the short circuited stub.

If the stub and the line have equal G_o, then

$$B_{SC} = -B_S$$

$$\frac{G_0}{\tan \beta L} = G_0 \left(\frac{2|K|\sqrt{1-k^2}}{1-|K|^2} \right)$$

$$\frac{G_0}{\tan \beta L} = G_0 \left(\frac{2|K|}{\sqrt{1-|K|^2}} \right)$$

$$\frac{1}{\tan\left(\frac{2\pi}{\lambda}\right)L} = \frac{2|K|}{\sqrt{1-|K|^2}}$$

$$\boxed{L = = \frac{\lambda}{2\pi} \tan^{-1} \frac{\sqrt{1-|K|^2}}{2|K|}}$$

This is the length of short circuited stub to be placed d meters towards the load

Double Stub Matching

Limitations of Single Stub Matching

i) The stub has to be located at a definite point on the line. Single stub is adequate for a openwire line. For coaxial lines, placement of stub at exact point is difficult.

ii) Two adjustments were required in single stub, these being the location and length of the stub.

iii) This technique is suitable for fixed frequency only. If frequency changes, the location of the stub has to be changed.

To overcome this difficulty, double stub impedance matching is used. In this system, two different short circuited stubs are used for impedance matching, location of the stubs is arbitrary and the spacing between the two stubs is made $\frac{\lambda}{4}$.

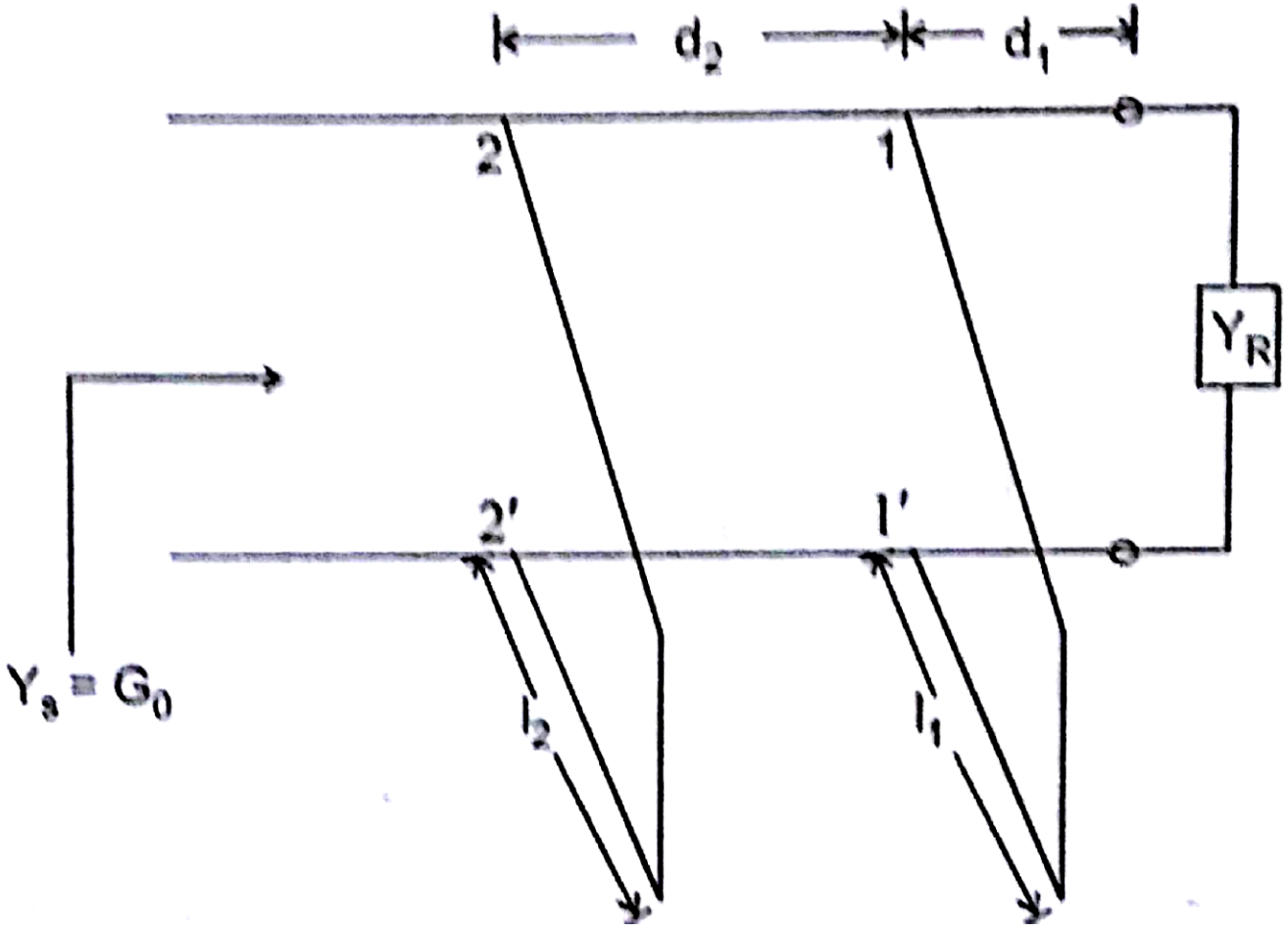

Let the first stub whose length is l_1 be located at the point 1 1′ at a distance d_1 from the load end.

The input impedance at any point on the line is given by:

$$Z_s = Z_o\left[\frac{Z_R + jZ_o \tan\beta s}{Z_o + jZ_R \tan\beta s}\right].$$

$$Z_s = \frac{1}{Y_s},\ Z_o = \frac{1}{Y_o} \text{ and } Z_R = \frac{1}{Y_R}$$

Substituting all these expressions into the expression for Z_s,

$$\frac{1}{Y_s} = \frac{1}{Y_o}\left[\frac{\frac{1}{Y_R} + j\frac{1}{Y_o}\tan\beta s}{\frac{1}{Y_o} + j\frac{1}{Y_R}\tan\beta s}\right]$$

by multiplying and dividing by Y_R

$$= \frac{1}{Y_o}\left[\frac{1 + j\frac{Y_R}{Y_o}\tan\beta s}{\frac{Y_R}{Y_o} + j\tan\beta s}\right]$$

$$\therefore \frac{Y_s}{Y_o} = \frac{\frac{Y_R}{Y_o} + j\tan\beta s}{1 + j\frac{Y_R}{Y_o}\tan\beta s}$$

We have $\frac{Y_s}{Y_o} = y_s =$ normalized input admittance

$\frac{Y_R}{Y_o} = y_R =$ normalized load admittance

$$\therefore y_s = \frac{y_R + j\tan\beta s}{1 + jy_R \tan\beta s}$$

$$y_s = \frac{(y_R + j\tan\beta s)(1 - jy_R \tan\beta s)}{(1 + jy_R \tan\beta s)(1 - jy_R \tan\beta s)}$$

$$y_s = \frac{y_R - jy_R^2 \tan\beta s + j\tan\beta s + y_R \tan^2\beta s}{1 + y_R^2 \tan^2\beta s}$$

$$= \frac{y_R(1 + \tan^2\beta s)}{1 + y_R^2 \tan^2\beta s} + \frac{j(1 - y_R^2)\tan\beta s}{1 + y_R^2 \tan^2\beta s}$$

At point $11'$, we have $s = d_1$. Substituting we get

$$y_s = \frac{y_R(1+\tan^2\beta d_1)}{1+y_R^2\tan^2\beta d_1} + j\frac{(1-y_R^2)\tan\beta d_1}{1+y_R^2\tan^2\beta d_1} = g_1 + jb_1$$

When a stub-1 having a susceptance of $\pm jb_{11}$ is added at this point, the new admittance value will be

$$y_s' = g_1 + jb_1'$$

where $b_1' = b_1 \pm b_{11}$ and g_1 remains unchanged.

Now the input admittance of the line looking toward the load at $22'$ location should be:

$$Y_s = G_o$$

$$Y_{22'} = \frac{Y_s}{G_o} = 1 \pm jb_{22'}$$

Case (i): Quarter-Wavelength spacing between two stubs ($d_2 = \lambda/4$)

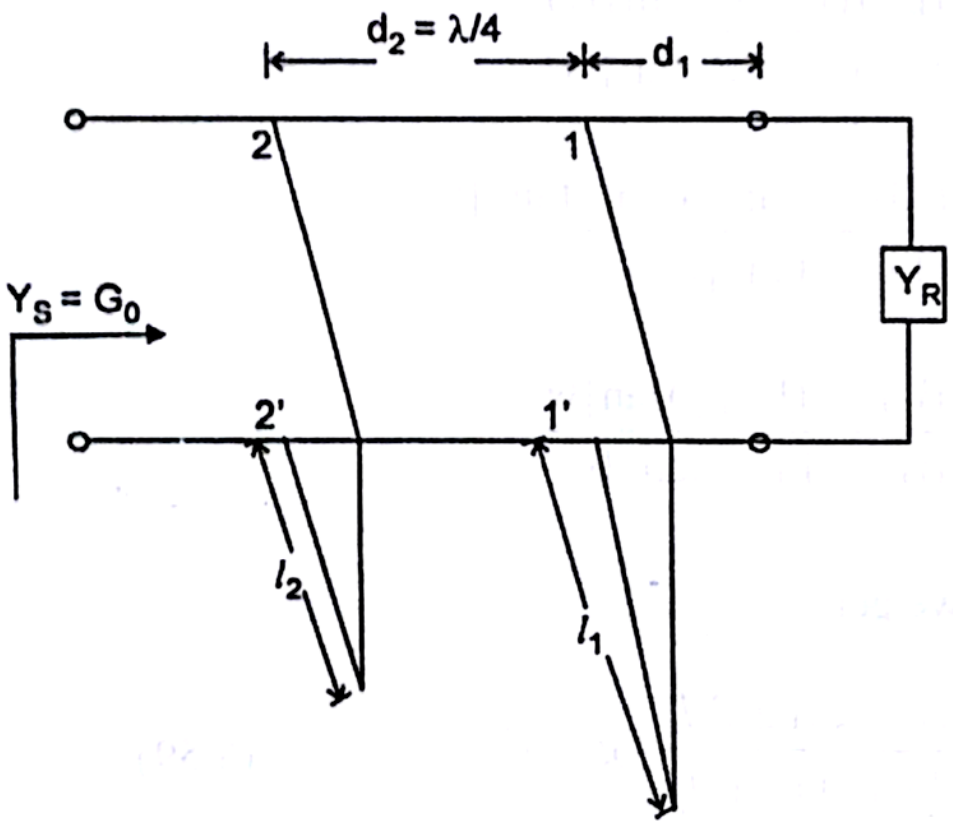

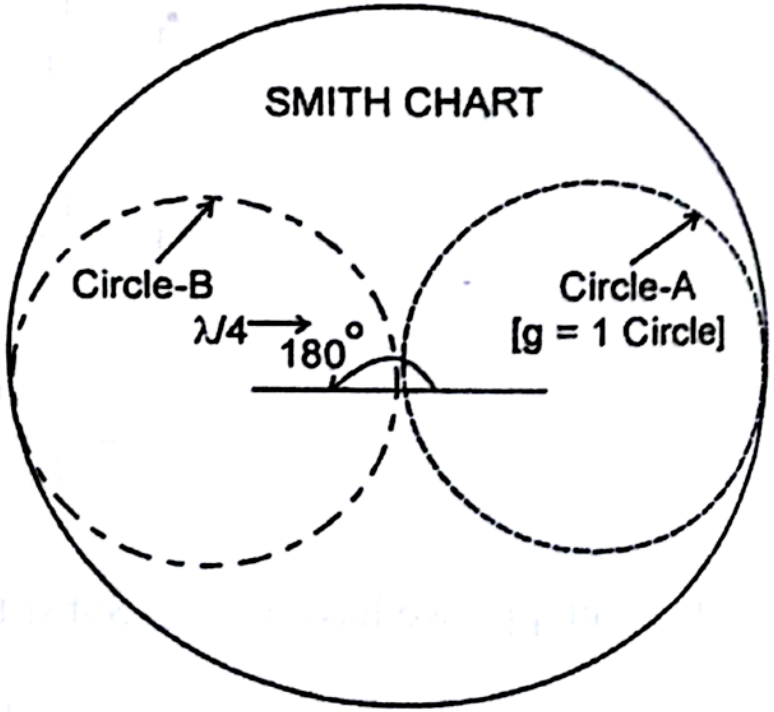

Case (ii) : Three-eighth's wavelength spacing between two stubs ($d_2 = 3\lambda/8$)

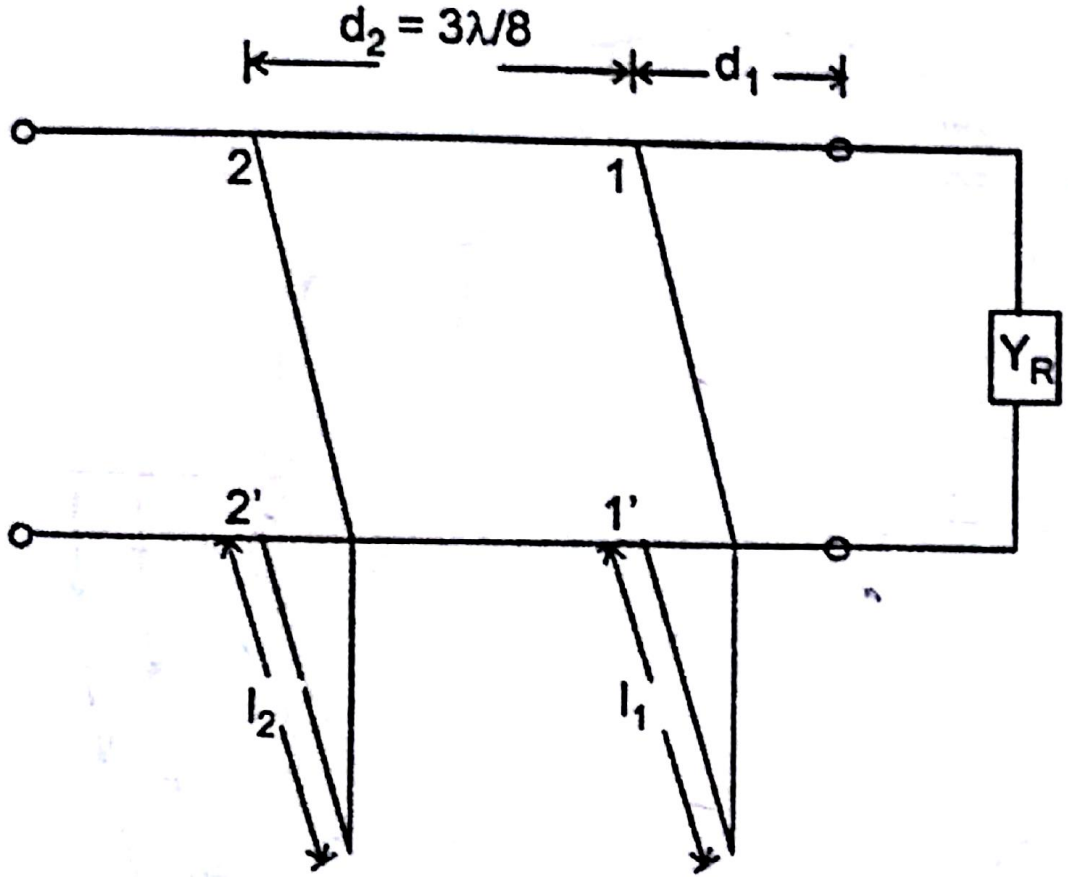

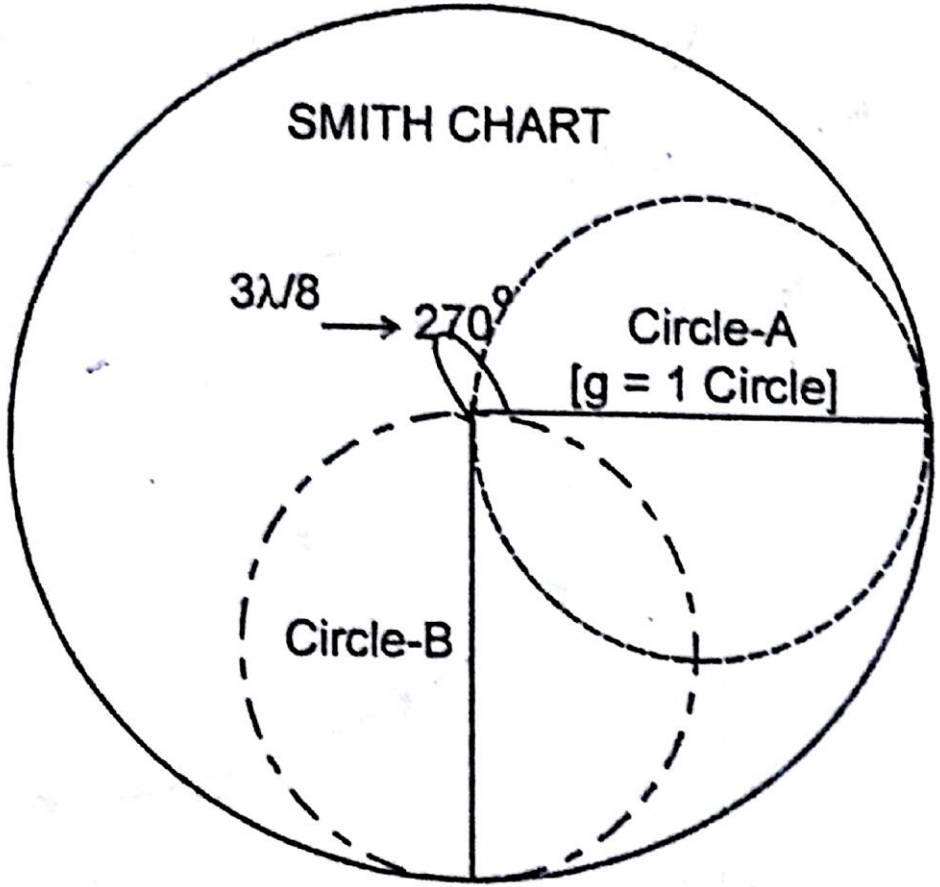

UNIT IV
WAVE GUIDES

General Wave behavior along uniform guiding structures – Transverse Electromagnetic Waves, Transverse Magnetic Waves, Transverse Electric Waves – TM and TE Waves between parallel plates. Field Equations in rectangular waveguides, TM and TE waves in rectangular waveguides, Bessel Functions, TM and TE waves in Circular waveguides

Electromagnetic Waves between parallel Plates

- The electromagnetic waves that are guided along ~~of~~ over conducting or dielectric surfaces are called guided waves

Consider an electromagnetic wave propagating between a pair of parallel perfectly conducting planes of infinite extent in the *y* and *z* directions as shown in Fig.4.1.

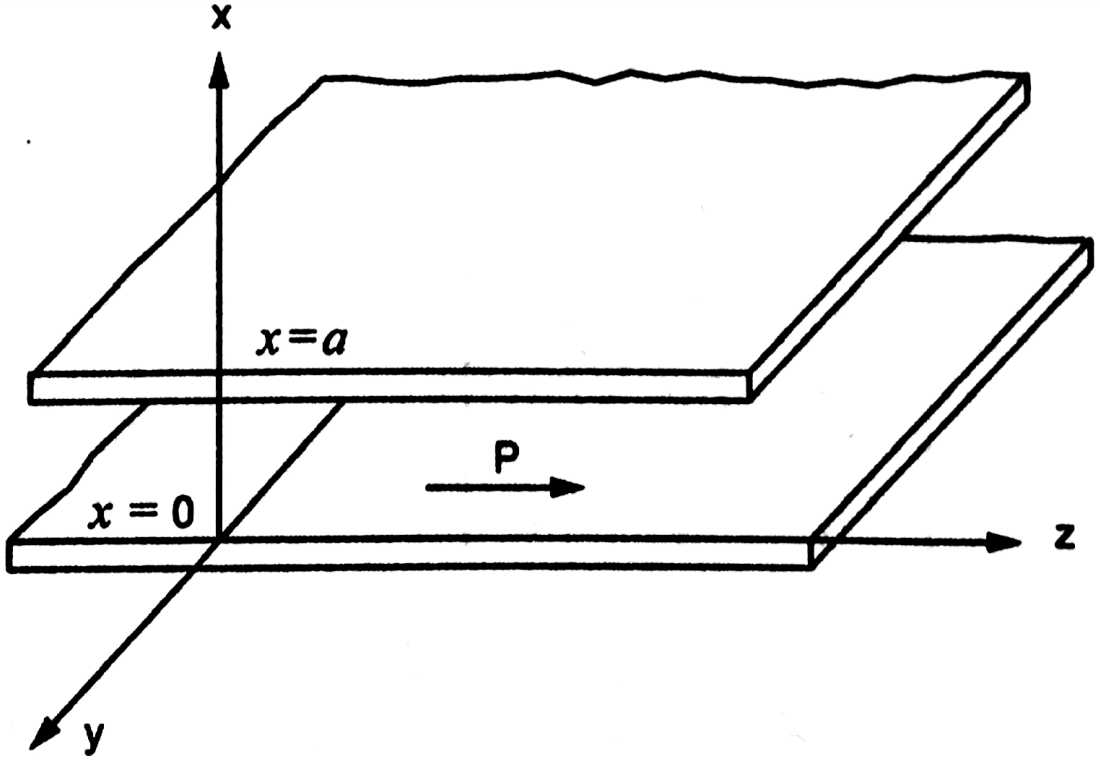

Parallel conducting guides

Maxwell's equations will be solved to determine the electromagnetic field configurations in the rectangular region.

Maxwell's equations for a non-conducting rectangular region are given as

$$\nabla \times H = j\,\omega\,\varepsilon\,E$$

$$\nabla \times E = -j\,\omega\,\mu\,H$$

$$\nabla \times H = \begin{vmatrix} \bar{a}_x & \bar{a}_y & \bar{a}_z \\ \frac{\partial}{\partial x} & \frac{\partial}{\partial y} & \frac{\partial}{\partial z} \\ H_x & H_y & H_z \end{vmatrix}$$

$$= \bar{a}_x\left(\frac{\partial H_z}{\partial y} - \frac{\partial H_y}{\partial z}\right) + \bar{a}_y\left(\frac{\partial H_x}{\partial z} - \frac{\partial H_z}{\partial x}\right) + \bar{a}_z\left(\frac{\partial H_y}{\partial x} - \frac{\partial H_x}{\partial y}\right)$$

$$= j\,\omega\,\varepsilon\,[\,\bar{a}_x E_x + \bar{a}_y E_y + \bar{a}_z E_z\,]$$

Equating x, y and z components on both sides,

$$\left.\begin{aligned} \frac{\partial H_z}{\partial y} - \frac{\partial H_y}{\partial z} &= j\omega\varepsilon E_x \\ \frac{\partial H_x}{\partial z} - \frac{\partial H_z}{\partial x} &= j\omega\varepsilon E_y \\ \frac{\partial H_y}{\partial x} - \frac{\partial H_x}{\partial y} &= j\omega\varepsilon E_z \end{aligned}\right\} \qquad \ldots (4.1)$$

$$\nabla \times E = \begin{vmatrix} \bar{a}_x & \bar{a}_y & \bar{a}_z \\ \frac{\partial}{\partial x} & \frac{\partial}{\partial y} & \frac{\partial}{\partial z} \\ E_x & E_y & E_z \end{vmatrix}$$

$$= \bar{a}_x\left(\frac{\partial E_z}{\partial y} - \frac{\partial E_y}{\partial z}\right) + \bar{a}_y\left(\frac{\partial E_x}{\partial z} - \frac{\partial E_z}{\partial x}\right) + \bar{a}_z\left(\frac{\partial E_y}{\partial x} - \frac{\partial E_x}{\partial y}\right)$$

$$= -j\,\omega\,\mu\,[\,\bar{a}_x H_x + \bar{a}_y H_y + \bar{a}_z\, H_z\,]$$

Equating x, y and z components on both sides,

$$\left.\begin{aligned} \frac{\partial E_z}{\partial y} - \frac{\partial E_y}{\partial z} &= -j\omega\mu H_x \\ \frac{\partial E_x}{\partial z} - \frac{\partial E_z}{\partial x} &= -j\omega\mu H_y \\ \frac{\partial E_y}{\partial x} - \frac{\partial E_x}{\partial y} &= -j\omega\mu H_z \end{aligned}\right\} \qquad \ldots (4.2)$$

The wave equation is given by

$$\nabla^2 E = \gamma^2 E$$

$$\nabla^2 H = \gamma^2 H$$

where $$\gamma^2 = (\sigma + j\omega\varepsilon)\ (j\omega\mu)$$

For a non-conducting medium, it becomes

$$\nabla^2 E = -\omega^2 \mu\varepsilon E$$

$$\nabla^2 H = -\omega^2 \mu\varepsilon H$$

$$\left.\begin{aligned} \frac{\partial^2 E}{\partial x^2} + \frac{\partial^2 E}{\partial y^2} + \frac{\partial^2 E}{\partial z^2} &= -\omega^2 \mu\varepsilon E \\ \frac{\partial^2 H}{\partial x^2} + \frac{\partial^2 H}{\partial y^2} + \frac{\partial^2 H}{\partial z^2} &= -\omega^2 \mu\varepsilon H \end{aligned}\right\} \qquad \ldots (4.3)$$

It is assumed that the propagation is in the z direction and the variation of field components in this z direction may be expressed in the form $e^{-\gamma z}$,

where γ is propagation constant

$$\gamma = \alpha + j\beta$$

If $\alpha = 0$, wave propagates without attenuation

If α is real *i.e.*, $\beta = 0$, there is no wave motion but only an exponential decrease in amplitude.

Let $$H_y = H_y^0 \, e^{-\gamma z}$$

$$\frac{\partial H_y}{\partial z} = -\gamma \, H_y^0 \, e^{-\gamma z} = -\gamma \, H_y$$

Similarly, $$\frac{\partial H_x}{\partial z} = -\gamma \, H_x$$

Let $$E_y = E_y^0 \, e^{-\gamma z}$$

$$\frac{\partial E_y}{\partial z} = -\gamma \, E_y$$

Similarly $$\frac{\partial E_x}{\partial z} = -\gamma \, E_x$$

There is no variation in the y direction *i.e.*, derivative of y is zero. Substituting the values of z derivatives and y derivatives in the equations (4.1), (4.2)and (4.3).

$$\left.\begin{aligned} \gamma H_y &= j\omega\varepsilon E_x \\ -\gamma H_x - \frac{\partial H_z}{\partial x} &= j\omega\varepsilon E_y \\ \frac{\partial H_y}{\partial x} &= j\omega\varepsilon E_z \end{aligned}\right\} \qquad \ldots (4.4)$$

$$\left.\begin{aligned} \gamma E_y &= -j\omega\mu H_x \\ -\gamma E_x - \frac{\partial E_z}{\partial x} &= -j\omega\mu H_y \\ \frac{\partial E_y}{\partial x} &= -j\omega\mu H_z \end{aligned}\right\} \qquad \ldots (4.5)$$

$$\left.\begin{aligned} \frac{\partial^2 E}{\partial x^2} + \gamma^2 E &= -\omega^2\mu\varepsilon E \\ \frac{\partial^2 H}{\partial x^2} + \gamma^2 H &= -\omega^2\mu\varepsilon H \end{aligned}\right\} \qquad \ldots (4.6)$$

where $\dfrac{\partial^2 E}{\partial z^2} = \gamma^2 E$ and $\dfrac{\partial^2 H}{\partial z^2} = \gamma^2 H$

Solving the equations (4.4) and (4.5), the fields H_x, H_y, E_x and E_y can be found out.

To solve H_x,

$$-\gamma H_x - \frac{\partial H_z}{\partial x} = j\omega\varepsilon E_y$$

$$\gamma E_y = -j\omega\mu H_x$$

From the above equations,

$$H_x = \frac{-\gamma E_y}{j\omega\mu}$$

$$E_y = -\frac{1}{j\omega\varepsilon}\left[\gamma H_x + \frac{\partial H_z}{\partial x}\right]$$

Substituting the value of E_y in the above equation,

$$H_x = \frac{-\gamma}{j\omega\mu}\left[-\frac{1}{j\omega\varepsilon}\left(\gamma H_x + \frac{\partial H_z}{\partial x}\right)\right]$$

$$H_x = \frac{-\gamma}{\omega^2\mu\varepsilon}\left[\gamma H_x + \frac{\partial H_z}{\partial x}\right]$$

$$H_x\left[1 + \frac{\gamma^2}{\omega^2\mu\varepsilon}\right] = \frac{-\gamma}{\omega^2\mu\varepsilon}\left[\frac{\partial H_z}{\partial x}\right]$$

$$H_x\left[\omega^2\mu\varepsilon + \gamma^2\right] = -\gamma\frac{\partial H_z}{\partial x}$$

$$\boxed{H_x = \frac{-\gamma}{\omega^2\mu\varepsilon + \gamma^2}\frac{\partial H_z}{\partial x}}$$

$$H_x = \frac{-\gamma}{h^2}\frac{\partial H_z}{\partial x}$$

where $h^2 = \gamma^2 + \omega^2\mu\varepsilon$

To solve H_y,

$$\gamma E_x + \frac{\partial E_z}{\partial x} = j\omega\mu H_y \qquad \text{[From eqn. (4.5)]}$$

$$\gamma H_y = j\omega\varepsilon E_x \qquad \text{[From eqn. (4.4)]}$$

From the above equations,

$$H_y = \frac{j\omega\varepsilon}{\gamma} E_x$$

$$E_x = \frac{1}{\gamma}\left[j\omega\mu H_y - \frac{\partial E_z}{\partial x}\right]$$

Substituting the value of E_x in the above equation,

$$H_y = \frac{j\omega\varepsilon}{\gamma} \cdot \frac{1}{\gamma}\left[j\omega\mu H_y - \frac{\partial E_z}{\partial x}\right]$$

$$H_y = \frac{-\omega^2\mu\varepsilon}{\gamma^2} H_y - \frac{j\omega\varepsilon}{\gamma^2} \frac{\partial E_z}{\partial x}$$

$$H_y\left(1 + \frac{\omega^2\mu\varepsilon}{\gamma^2}\right) = -\frac{j\omega\varepsilon}{\gamma^2} \frac{\partial E_z}{\partial x}$$

$$H_y(\gamma^2 + \omega^2\mu\varepsilon) = -j\omega\varepsilon \frac{\partial E_z}{\partial x}$$

$$H_y = \frac{-j\omega\varepsilon}{(\gamma^2 + \omega^2\mu\varepsilon)} \frac{\partial E_z}{\partial x}$$

$$h^2 = \gamma^2 + \omega^2\mu\varepsilon$$

$$\boxed{H_y = \frac{-j\omega\varepsilon}{h^2} \frac{\partial E_z}{\partial x}}$$

To solve E_x,

$$\gamma E_x + \frac{\partial E_z}{\partial x} = j\omega\mu H_y \qquad \text{[From eqn. (4.5)]}$$

$$H_y = \frac{j\omega\varepsilon}{\gamma} E_x \qquad \text{[From eqn. (4.4)]}$$

Substituting the value of H_y in the above equation,

$$\gamma E_x + \frac{\partial E_z}{\partial x} = j\omega\mu \left[\frac{j\omega\varepsilon}{\gamma} E_x \right]$$

$$= \frac{-\omega^2 \mu\varepsilon}{\gamma} E_x$$

$$\gamma E_x + \frac{\omega^2 \mu \varepsilon}{\gamma} E_x = -\frac{\partial E_z}{\partial x}$$

$$E_x \left[\gamma + \frac{\omega^2 \mu \varepsilon}{\gamma} \right] = -\frac{\partial E_z}{\partial x}$$

$$E_x [\gamma^2 + \omega^2 \mu \varepsilon] = -\gamma \frac{\partial E_z}{\partial x}$$

$$E_x = \frac{-\gamma}{h^2} \frac{\partial E_z}{\partial x}$$

To solve E_y,

$$\gamma H_x + \frac{\partial H_z}{\partial x} = -j\omega\varepsilon E_y \qquad \text{[From eqn. (4.4)]}$$

$$H_x = -\frac{\gamma E_y}{j\omega\mu} \qquad \text{[From eqn. (4.5)]}$$

Substituting the value of H_x in the above equation,

$$\frac{-\gamma^2 E_y}{j\omega\mu} + \frac{\partial H_z}{\partial x} = -j\omega\varepsilon E_y$$

$$E_y\left[\frac{-\gamma^2}{j\omega\mu} + j\omega\varepsilon\right] = -\frac{\partial H_z}{\partial x}$$

$$E_y\left[\gamma^2 + \omega^2\mu\varepsilon\right] = j\omega\mu\frac{\partial H_z}{\partial x}$$

$$E_y = \frac{j\omega\mu}{h^2}\frac{\partial H_z}{\partial x}$$

where $$h^2 = \gamma^2 + \omega^2\mu\varepsilon$$

Transverse Electric Waves

Transverse electric (TE) waves are waves in which the electric field strength E is entirely transverse. It has a magnetic field strength H_z in the direction of propagation and no component of electric field E_z in the same direction. ($E_z = 0$).

Substituting the value of $E_z = 0$ in the following equations.

$$E_x = -\frac{\gamma}{h^2}\frac{\partial E_z}{\partial x} \quad \text{and} \quad H_y = \frac{-j\omega\varepsilon}{h^2}\frac{\partial E_z}{\partial x}$$

Then $\quad E_x = 0$ and $H_y = 0$

The wave equation for the component E_y

$$\frac{\partial^2 E_y}{\partial x^2} + \gamma^2 E_y = -\omega^2 \mu\varepsilon E_y$$

$$\frac{\partial^2 E_y}{\partial x^2} = -\omega^2 \mu \varepsilon E_y - \gamma^2 E_y$$

$$= -(\omega^2 \mu \varepsilon + \gamma^2) E_y$$

But

$$h^2 = \gamma^2 + \omega^2 \mu \varepsilon$$

$$\boxed{\frac{\partial^2 E_y}{\partial x^2} + h^2 E_y = 0}$$

This is a differential equation of simple harmonic motion. The solution of this equation is given by

$$E_y = C_1 \sin hx + C_2 \cos hx$$

where C_1 and C_2 are arbitrary constants.

If E_y is expressed in time and direction ($E_y = E_y^0 \; e^{-\gamma z}$), then the solution becomes,

$$E_y = (C_1 \sin hx + C_2 \cos hx)\, e^{-\gamma z}$$

The arbitrary constants C_1 and C_2 are determined from the boundary conditions.

The tangential component of E is zero at the surface of conductors for all values of z.

$$E_y = 0 \text{ at } x = 0$$

$$E_y = 0 \text{ at } x = a$$

Applying the first boundary condition ($x = 0$)

$$0 = 0 + C_2$$

$$C_2 = 0$$

Then

$$E_y = C_1 \sin hx \; e^{-\gamma z}$$

Applying the second boundary condition ($x = a$)

$$\sin ha = 0$$

$$h = \frac{m\pi}{a}$$

where

$$m = 1, 2, 3, \ldots\ldots\ldots$$

$$E_y = C_1 \sin\left(\frac{m\pi}{a}x\right) e^{-\gamma z}$$

$$\frac{\partial E_y}{\partial x} = \frac{m\pi}{a} C_1 \cos\left(\frac{m\pi}{a}x\right) e^{-\gamma z}$$

From eqn. (4.5),

$$\gamma E_y = -j\omega\mu H_x$$

$$\frac{\partial E_y}{\partial x} = -j\omega\mu H_z$$

From the first equation, $$H_x = \frac{-\gamma E_y}{j\omega\mu}$$

Substituting the value of E_y in the above equation

$$H_x = \frac{-\gamma}{j\omega\mu} C_1 \sin\left(\frac{m\pi}{a}x\right) e^{-\gamma x}$$

From the second equation, $$H_z = -\frac{1}{j\omega\mu}\frac{\partial E_y}{\partial x}$$

Substituting the value of E_y in the above equation

$$H_z = \frac{-m\pi}{j\omega\mu a} C_1 \cos\left(\frac{m\pi}{a}x\right) e^{-\gamma z}$$

$$H_z = \frac{jm\pi}{\omega\mu a} C_1 \cos\left(\frac{m\pi}{a}x\right) e^{-\gamma z}$$

The field strengths for TE waves between parallel planes are

$$\left.\begin{aligned} E_y &= C_1 \sin\left(\frac{m\pi}{a}x\right)e^{-\gamma z} \\ H_x &= \frac{-\gamma}{j\omega\mu} C_1 \sin\left(\frac{m\pi}{a}x\right)e^{-\gamma z} \\ H_z &= \frac{-m\pi}{j\omega\mu a} C_1 \cos\left(\frac{m\pi}{a}x\right)e^{-\gamma z} \end{aligned}\right\} \quad \ldots (4.7)$$

Each value of m specifies a particular field of configuration or mode and the wave associated with integer m is designated as TE_{m0} wave or TE_{m0} mode. The second subscript refers to another integer which varies with y.

If $m = 0$, then all the fields become zero $E_y = 0$, $H_x = 0$, $H_z = 0$. Therefore, the lowest value of $m = 1$. The lowest order mode is TE_{10}. This is called the dominant mode in TE waves.

The propagation constant $\gamma = \alpha + j\beta$. If the wave propagates without attenuation, $\alpha = 0$. only phase shift exists.

$$\gamma = j\beta$$

Then the field strengths for TE waves are

$$\left.\begin{aligned} E_y &= C_1 \sin\left(\frac{m\pi}{a}x\right) e^{-j\beta z} \\ H_x &= \frac{-\beta}{j\omega\mu} C_1 \sin\left(\frac{m\pi}{a}x\right) e^{-j\beta z} \\ H_z &= \frac{jm\pi}{\omega\mu a} C_1 \cos\left(\frac{m\pi}{a}x\right) e^{-j\beta z} \end{aligned}\right\} \quad \ldots (4.8)$$

The field distributions for TE_{10} mode between parallel planes are shown in Fig.

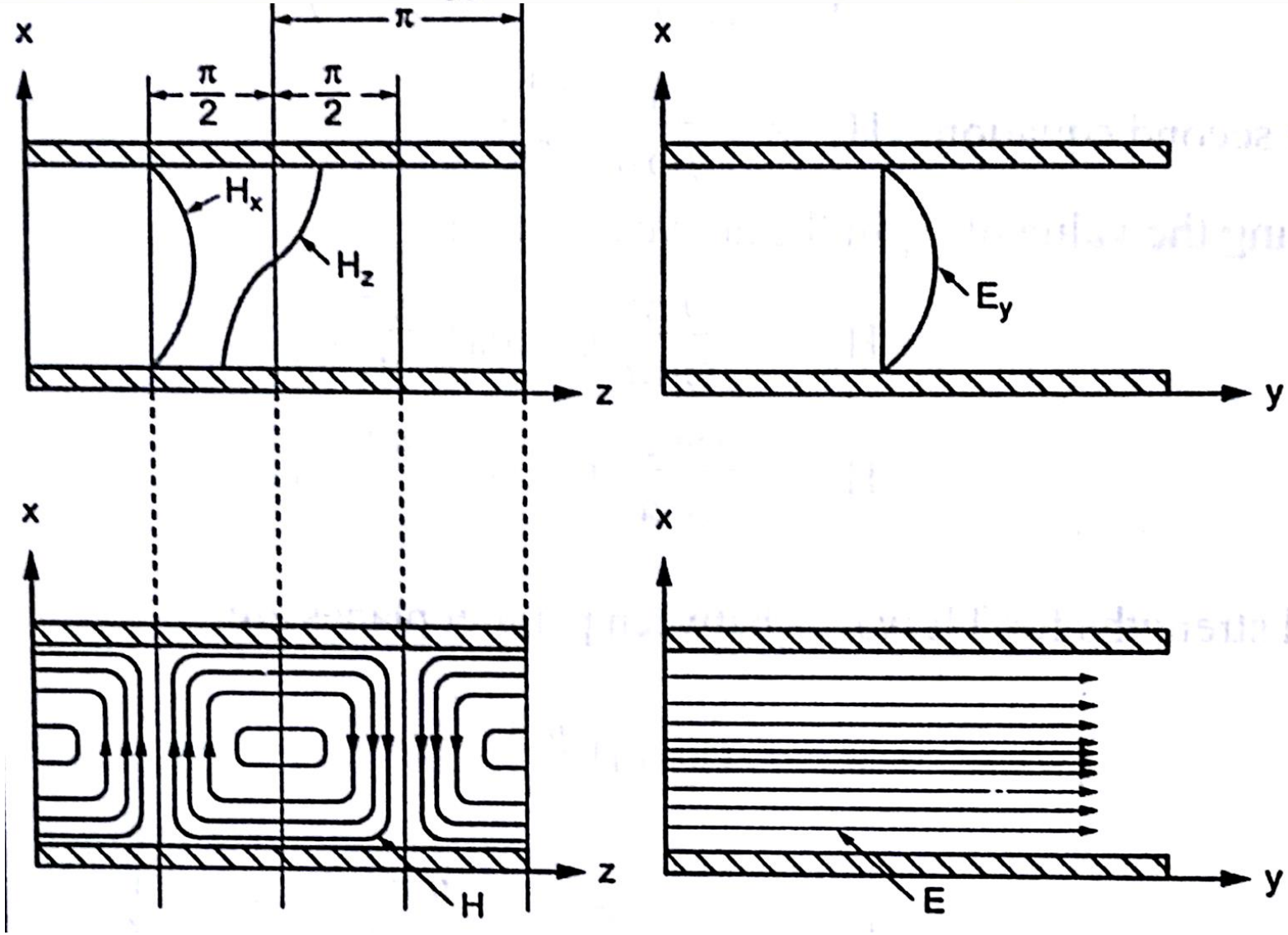

Electric and magnetic fields between parallel planes for the TE_{10}

Transverse Magnetic Waves

Transverse magnetic (TM) waves are waves in which the magnetic field strength H is entirely transverse. It has an electric field strength E_z in the direction of propagation and no component of magnetic field H_z in the same direction ($H_z = 0$).

Substituting the value of $H_z = 0$ in the following equations,

$$H_x = \frac{-\gamma}{h^2}\frac{\partial H_z}{\partial x} \quad \text{and} \quad E_y = \frac{j\omega\mu}{h^2}\frac{\partial H_z}{\partial x}$$

Then

$$H_x = 0 \quad \text{and} \quad E_y = 0 \qquad [\because H_z = 0]$$

The wave equation for the component H_y

$$\frac{\partial^2 H_y}{\partial x^2} + \gamma^2 H_y = -\omega^2\mu\varepsilon H_y$$

$$\frac{\partial^2 H_y}{\partial x^2} = -(\omega^2\mu\varepsilon + \gamma^2) H_y$$

But $$h^2 = \gamma^2 + \omega^2\mu\varepsilon$$

$$\boxed{\frac{\partial^2 H_y}{\partial x^2} + h^2 H_y = 0}$$

This is a differential equation of simple harmonic motion. The solution of this equation is given by

$$H_y = C_3 \sin hx + C_4 \cos hx$$

where C_3 and C_4 are arbitrary constants. If H_y is expressed in time and direction, then the solution becomes

$$H_y = (C_3 \sin hx + C_4 \cos hx)\, e^{-\gamma z}$$

The boundary conditions cannot be applied directly to H_y to determine the arbitrary constants C_3 and C_4 because the tangential component of H is not zero at the surface of a conductor. However, E_z can be obtained in terms of H_z.

$$\frac{\partial H_y}{\partial x} = j\omega\varepsilon E_z \qquad \text{[eqn. (4.4)]}$$

$$E_z = \frac{1}{j\omega\varepsilon}\frac{\partial H_y}{\partial x}$$

$$= \frac{h}{j\omega\varepsilon}\left[C_3 \cos hx - C_4 \sin hx\right] e^{-\gamma z}$$

Applying the first boundary condition ($E_z = 0$ at $x = 0$)

$$C_3 = 0$$

Then $$E_z = \frac{-h}{j\omega\varepsilon} C_4 \sin hx \, e^{-\gamma z}$$

Applying the second boundary condition ($E_z = 0$ at $x = a$)

$$\sin ha = 0$$

$$h = \frac{m\pi}{a}$$

where m is a mode $m = 1, 2, 3, \ldots\ldots\ldots$

Therefore, $$E_z = -\frac{m\pi}{j\omega\varepsilon a} C_4 \sin\left(\frac{m\pi}{a}x\right) e^{-\gamma z}$$

$$= \frac{j m \pi}{\omega\varepsilon a} C_4 \sin\left(\frac{m\pi}{a}x\right) e^{-\gamma z}$$

$$H_y = C_4 \cos\left(\frac{m\pi}{a}x\right) e^{-\gamma z}$$

But $$\gamma H_y = j\omega\varepsilon E_x$$

$$E_x = \frac{\gamma}{j\omega\varepsilon} H_y$$

$$= \frac{\gamma}{j\omega\varepsilon} C_4 \cos\left(\frac{m\pi}{a}x\right) e^{-\gamma z}$$

The field strengths for TM waves between parallel planes are

$$\left.\begin{aligned} H_y &= C_4 \cos\left(\frac{m\pi}{a}x\right) e^{-\gamma z} \\ E_x &= \frac{\gamma}{j\omega\varepsilon} C_4 \cos\left(\frac{m\pi}{a}x\right) e^{-\gamma z} \\ E_z &= \frac{jm\pi}{\omega\varepsilon a} C_4 \sin\left(\frac{m\pi}{a}x\right) e^{-\gamma z} \end{aligned}\right\} \quad \ldots (4.9)$$

The transverse magnetic wave associated with the integer m is designated as TM_{m0} wave or TM_{m0} mode. If $m = 0$ all the fields will not be equal to zero *i.e.*, E_x and H_y exist and only $E_z = 0$. In the case of TM waves there is a possibility of $m = 0$.

If the wave propagates without attenuation ($\alpha = 0$), the propagation constant become $\gamma = j\beta$. The field strengths for TM waves between parallel conducting planes are :

$$\left.\begin{aligned} H_y &= C_4 \cos\left(\frac{m\pi}{a}x\right) e^{-j\beta z} \\ E_x &= \frac{\beta}{\omega\varepsilon} C_4 \cos\left(\frac{m\pi}{a}x\right) e^{-j\beta z} \\ E_z &= \frac{jm\pi}{\omega\varepsilon a} C_4 \sin\left(\frac{m\pi}{a}x\right) e^{-j\beta z} \end{aligned}\right\} \quad \ldots (4.10)$$

The field distributions for TM_{10} wave between parallel planes are shown

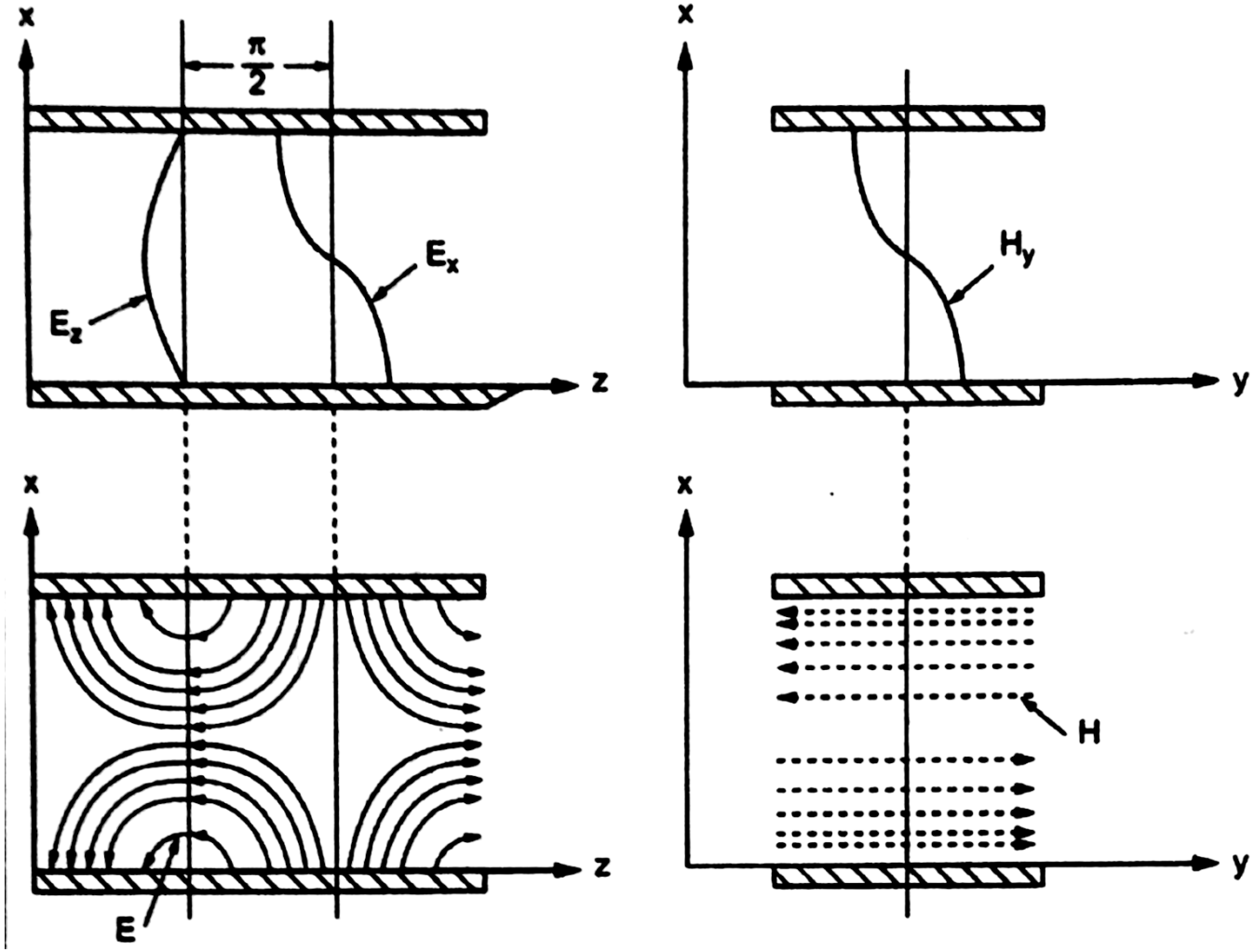

Transverse Electromagnetic Waves

The field strength for TM waves are

$$\left.\begin{aligned} H_y &= C_4 \cos\left(\frac{m\pi}{a}x\right) e^{-j\beta z} \\ E_x &= \frac{\beta}{\omega\varepsilon} C_4 \cos\left(\frac{m\pi}{a}x\right) e^{-j\beta z} \\ E_z &= \frac{jm\pi}{\omega\varepsilon a} C_4 \sin\left(\frac{m\pi}{a}x\right) e^{-j\beta z} \end{aligned}\right\} \quad \ldots (4.11)$$

For TEM waves $E_z = 0$ and the minimum value of $m = 0$.

$$H_y = C_4 e^{-j\beta z}$$

$$E_x = \frac{\beta}{\omega\varepsilon} C_4 e^{-j\beta z}$$

$$E_z = 0$$

These fields are not only entirely transverse, but they are constant in amplitude between parallel planes.

Characteristics:

For the lowest value $m = 0$ and dielectric is air.

Propagation constant $\gamma = \sqrt{0 - \omega^2 \mu_0 \varepsilon_0} = j\omega\sqrt{\mu_0 \varepsilon_0}$

$$\beta = \omega\sqrt{\mu_0 \varepsilon_0}$$

$$\text{Velocity} \quad v = \frac{\omega}{\beta} = \frac{1}{\sqrt{\mu_0 \varepsilon_0}} = c$$

$$\text{Wavelength} \quad \lambda = \frac{2\pi}{\beta} = \frac{c}{f}$$

Unlike TE and TM waves, the velocity of TEM wave is independent of frequency and has the value $c = 3 \times 10^8$ m/sec.

The cut-off frequency for TEM waves is zero.

$$f_c = \frac{m}{2a\sqrt{\mu\varepsilon}} = 0 \qquad (m = 0)$$

This means that for TEM waves, all frequencies down to zero can propagate along the guide. The ratio of E to H between the parallel planes for a travelling wave is

$$\left|\frac{E}{H}\right| = \sqrt{\frac{\mu_0}{\varepsilon_0}}$$

The fields distributions are shown in

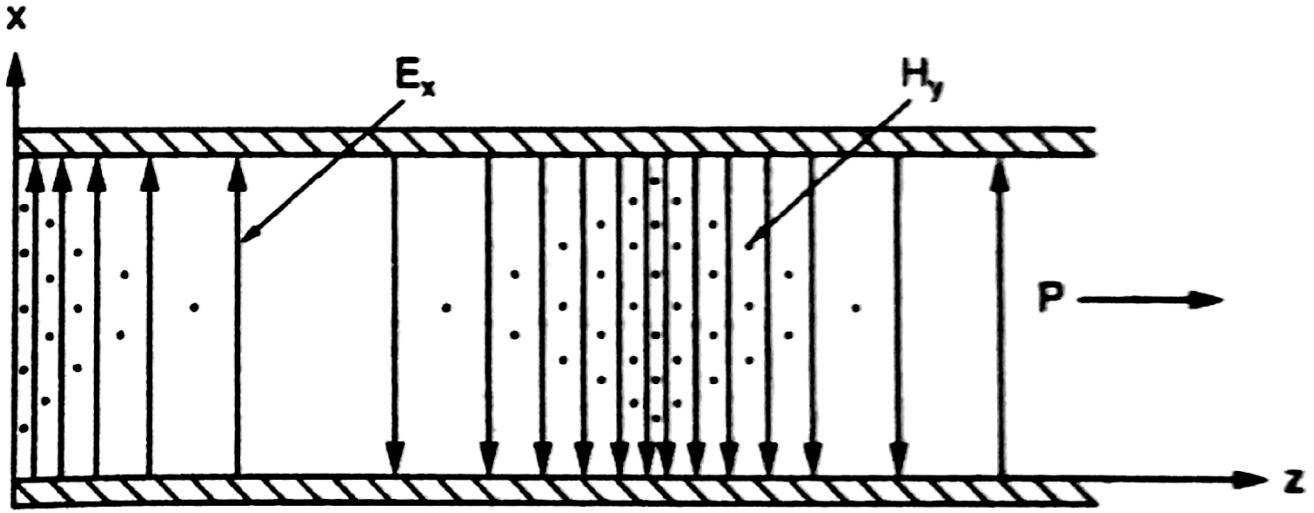

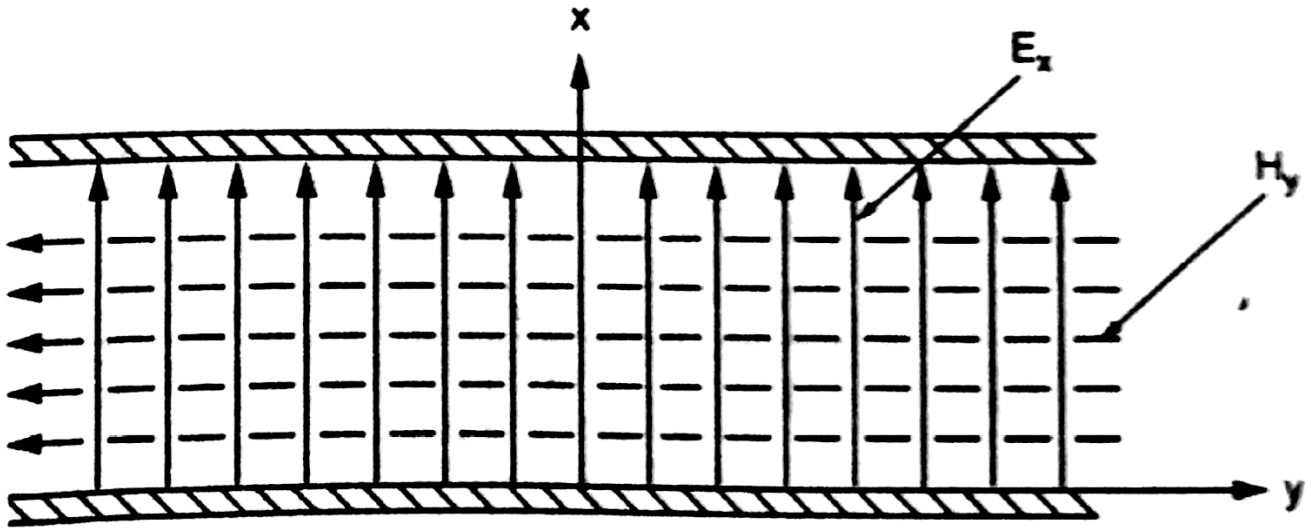

Rectangular Waveguides

- Rectangular or Circular shape → simple lowest cost
- A hallow conducting metallic tube of uniform cross section is used for propagation
- Waves are reflected from wall to wall
- Zig-zag fashion
- Maxwell's equations are used to determine electromagnetic fields

Electromagnetic fields between rectangular waveguide

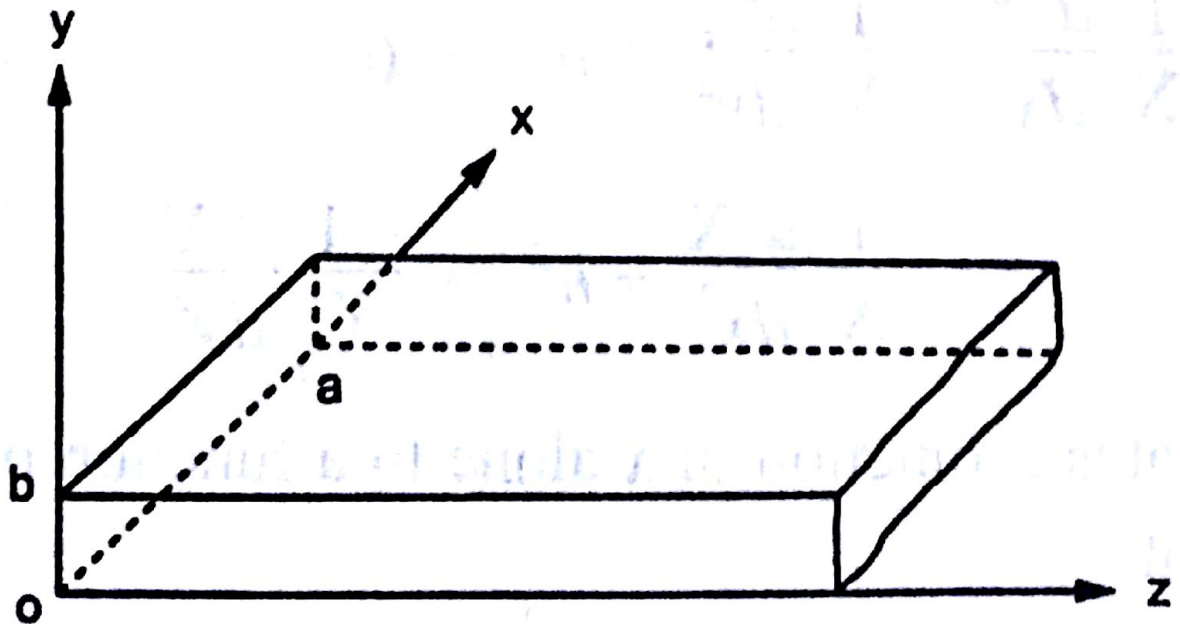

A rectangular waveguide

The Maxwell's equation for non-conducting medium

$$\nabla \times \mathrm{H} = j\omega\varepsilon\,\mathrm{E} \qquad [\because \sigma = 0]$$

$$\nabla \times \mathrm{H} = \begin{vmatrix} \bar{a}_x & \bar{a}_y & \bar{a}_z \\ \frac{\partial}{\partial x} & \frac{\partial}{\partial x} & \frac{\partial}{\partial x} \\ \mathrm{H}_x & \mathrm{H}_y & \mathrm{H}_z \end{vmatrix} = j\omega\varepsilon\,(\bar{a}_x \mathrm{E}_x + \bar{a}_y \mathrm{E}_y + \bar{a}_z \mathrm{E}_z)$$

Equating x, y, and z components

$$\left.\begin{aligned} \frac{\partial \mathrm{H}_z}{\partial y} - \frac{\partial \mathrm{H}_y}{\partial x} &= j\omega\varepsilon\,\mathrm{E}_x \\ \frac{\partial \mathrm{H}_x}{\partial z} - \frac{\partial \mathrm{H}_z}{\partial x} &= j\omega\varepsilon\,\mathrm{E}_y \\ \frac{\partial \mathrm{H}_x}{\partial y} - \frac{\partial \mathrm{H}_y}{\partial x} &= j\omega\varepsilon\,\mathrm{E}_z \end{aligned}\right\} \quad \ldots \quad 1$$

Similarly $\nabla \times E = -j\omega\mu H$

$$\nabla \times E = \begin{vmatrix} \bar{a}_x & \bar{a}_y & \bar{a}_z \\ \frac{\partial}{\partial x} & \frac{\partial}{\partial y} & \frac{\partial}{\partial z} \\ E_x & E_y & E_z \end{vmatrix} = -j\omega\mu\,[\bar{a}_x H_x + \bar{a}_y H_y + \bar{a}_z H_z]$$

Equating x, y and z components

$$\left.\begin{aligned} \frac{\partial E_z}{\partial y} - \frac{\partial E_y}{\partial z} &= -j\omega\mu H_x \\ \frac{\partial E_x}{\partial z} - \frac{\partial E_z}{\partial x} &= -j\omega\mu H_y \\ \frac{\partial E_y}{\partial x} - \frac{\partial E_x}{\partial y} &= -j\omega\mu H_z \end{aligned}\right\} \quad \ldots \quad 2$$

Similarly for the wave equation,

$$\left.\begin{aligned}\frac{\partial^2 H}{\partial x^2}+\frac{\partial^2 H}{\partial y^2}+\frac{\partial^2 H}{\partial z^2} &= -\omega^2\mu\varepsilon H\\ \frac{\partial^2 E}{\partial x^2}+\frac{\partial^2 E}{\partial y^2}+\frac{\partial^2 E}{\partial z^2} &= -\omega^2\mu\varepsilon E\end{aligned}\right\} \quad \ldots \quad 3$$

Let

$$H_y = H_y^{\circ} \cdot e^{-\gamma z}$$

$$\frac{\partial H_y}{\partial z} = -\gamma H_y^{\circ} e^{-\gamma z} = -\gamma H_y$$

Similarly

$$\frac{\partial H_x}{\partial z} = -\gamma H_x$$

Let

$$E_y = E_y^{\circ} e^{-\gamma z}$$

$$\frac{\partial E_y}{\partial z} = -\gamma E_y^{\circ} e^{-\gamma z} = -\gamma E_y$$

Similarly

$$\frac{\partial E_x}{\partial z} = -\gamma E_x$$

Substituting these values in equations 1, 2, 3

$$\frac{\partial H_z}{\partial y} + \gamma H_y = j\omega\varepsilon E_x \qquad \ldots\ldots 4$$

$$\frac{\partial H_z}{\partial x} + \gamma H_x = -j\omega\varepsilon E_y \qquad \ldots\ldots 5$$

$$\frac{\partial H_y}{\partial x} - \frac{\partial H_x}{\partial z} = j\omega\varepsilon E_z \qquad \ldots\ldots 6$$

$$\frac{\partial E_z}{\partial y} + \gamma E_y = -j\omega\mu H_x \qquad \ldots\ldots 7$$

$$\frac{\partial E_z}{\partial x} + \gamma E_x = j\omega\mu H_y \qquad \ldots\ldots 8$$

$$\frac{\partial E_y}{\partial x} - \frac{\partial E_x}{\partial y} = -j\omega\mu H_z \qquad \ldots\ldots 9$$

Wave equations thus become

$$\frac{\partial^2 E_z}{\partial x^2} + \frac{\partial^2 E_z}{\partial y^2} + \gamma^2 E_z = -\omega^2\mu\varepsilon E_z$$

$$\frac{\partial^2 H_z}{\partial x^2} + \frac{\partial^2 H_z}{\partial y^2} + \gamma^2 H_z = -\omega^2\mu\varepsilon H_z$$

Solving the following equations 5 and 7

$$\frac{\partial H_z}{\partial x} + \gamma H_x = -j\omega\varepsilon E_y \qquad .....5$$

$$\frac{\partial E_z}{\partial y} + \gamma E_y = -j\omega\mu H_x \qquad .....7$$

$$\therefore \quad H_x = -\frac{1}{j\omega\mu}\left[\frac{\partial E_z}{dy} + \gamma E_y\right]$$

Substituting in equation 5

$$\frac{\partial H_z}{\partial x} + \gamma H_x = -j\omega\varepsilon E_y \qquad .....5$$

$$\frac{\partial H_z}{\partial x} + \gamma\left[-\frac{1}{j\omega\mu}\left(\frac{\partial E_z}{\partial y} + \gamma E_y\right)\right] = -j\omega\varepsilon E_y$$

$$\frac{\partial H_z}{\partial x} - \frac{\gamma}{j\omega\mu}\frac{\partial E_z}{\partial y} - \frac{\gamma^2 E_y}{j\omega\mu} = -j\omega\varepsilon E_y$$

$$\frac{\partial H_z}{\partial x} - \frac{\gamma}{j\omega\mu}\frac{\partial E_z}{\partial y} = \left(\frac{\gamma^2}{j\omega\mu} - j\omega\varepsilon\right) E_y$$

$$j\omega\mu\frac{\partial H_z}{\partial x} - \gamma\frac{\partial E_z}{\partial y} = (\gamma^2 + \omega^2\mu\varepsilon) E_y$$

$$= h^2 E_y$$

$$E_y = \frac{j\omega\mu}{h^2}\frac{\partial H_z}{\partial x} - \frac{\gamma}{h^2}\frac{\partial E_z}{\partial y}$$

Similarly,

$$H_x = \frac{-\gamma}{h^2}\frac{\partial H_z}{\partial x} + \frac{j\omega\varepsilon}{h^2}\frac{\partial E_z}{\partial y}$$

Solving the equations 4 and 8

$$\frac{\partial H_z}{\partial y} + \gamma H_y = j\omega\varepsilon E_x \qquad \ldots\ldots 4$$

$$\frac{\partial E_z}{\partial x} + \gamma E_x = j\omega\mu H_y \qquad \ldots\ldots 8$$

$$E_x = \frac{1}{j\omega\varepsilon}\left[\frac{\partial H_z}{\partial y} + \gamma H_y\right]$$

Substituting E_x in equation 8

$$\frac{\partial E_z}{\partial x} + \gamma\left[\frac{1}{j\omega\varepsilon}\left(\frac{\partial H_z}{\partial y} + \gamma H_y\right)\right] = j\omega\mu H_y$$

$$\frac{\partial E_z}{\partial x} + \frac{\gamma}{j\omega\varepsilon}\frac{\partial H_z}{\partial y} + \frac{\gamma^2}{j\omega\varepsilon} H_y = j\omega\mu H_y$$

$$\frac{\partial E_z}{\partial x} + \frac{\gamma}{j\omega\varepsilon}\frac{\partial H_z}{\partial y} = \left(j\omega\mu - \frac{\gamma^2}{j\omega\varepsilon}\right) H_y$$

$$j\omega\varepsilon\frac{\partial E_z}{\partial x} + \gamma\frac{\partial H_z}{\partial y} = -(\omega^2\mu\varepsilon + \gamma^2) H_y$$

$$= -h^2 H_y$$

$$H_y = \frac{-j\omega\varepsilon}{h^2}\frac{\partial E_z}{\partial x} - \frac{\gamma}{h^2}\frac{\partial H_z}{\partial y}$$

Similarly

$$E_x = \frac{-\gamma}{h^2}\frac{\partial E_z}{\partial x} - \frac{j\omega\mu}{h^2}\frac{\partial H_z}{\partial y}$$

The following equations give the relationships among the fields within the rectangular wave guide.

$$\left.\begin{aligned}
E_x &= \frac{-\gamma}{h^2}\frac{\partial E_z}{\partial x} - \frac{j\omega\mu}{h^2}\frac{\partial H_z}{\partial y} \\
E_y &= \frac{-\gamma}{h^2}\frac{\partial E_z}{\partial y} + \frac{j\omega\mu}{h^2}\frac{\partial H_z}{\partial x} \\
H_x &= \frac{-\gamma}{h^2}\frac{\partial H_z}{\partial x} + \frac{j\omega\varepsilon}{h^2}\frac{\partial E_z}{\partial y} \\
H_y &= \frac{-\gamma}{h^2}\frac{\partial H_z}{\partial y} - \frac{j\omega\varepsilon}{h^2}\frac{\partial E_z}{\partial x}
\end{aligned}\right\} \quad \ldots\ldots 10$$

Transverse Magnetic Waves (TM) in Rectangular Waveguides

The wave equation in a rectangular wave guide is given by

$$\frac{\partial^2 E_z}{\partial x^2} + \frac{\partial^2 E_z}{\partial y^2} + \gamma^2 E_z = -\omega^2 \mu \varepsilon E_z$$

The solution of the equation is

$$E_z(x, y, z) = \overset{\circ}{E}_z(x, y)\, e^{-\gamma z}$$

$$\text{Let} \quad \overset{\circ}{E}_z = XY$$

where X is a function of x alone

Y is a function of y alone

Substituting the value of E_z in the wave equation

$$Y\frac{d^2X}{dx^2} + X\frac{d^2Y}{dy^2} + \gamma^2 XY = -\omega^2\mu\varepsilon XY$$

$$Y\frac{d^2X}{dx^2} + X\frac{d^2Y}{dy^2} + (\gamma^2 + \omega^2\mu\varepsilon)XY = 0$$

Substituting $h^2 = \gamma^2 + \omega^2\mu\varepsilon$

Then $$Y\frac{d^2X}{dx^2} + X\frac{d^2Y}{dy^2} + h^2 XY = 0$$

Dividing by XY,

$$\frac{1}{X}\frac{d^2X}{dx^2} + \frac{1}{Y}\frac{d^2Y}{dy^2} + h^2 = 0$$

$$\frac{1}{X}\frac{d^2X}{dx^2} + h^2 = \frac{-1}{Y}\frac{d^2Y}{dy^2}$$

The expression equates a function of x alone to a function of y alone and this can be equated to a constant.

$$\frac{1}{X}\frac{d^2X}{dx^2} + h^2 = A^2$$

$$\frac{1}{X}\frac{d^2X}{dx^2} + h^2 - A^2 = 0$$

Let

$$B^2 = h^2 - A^2$$

$$\frac{1}{X}\frac{d^2X}{dx^2} + B^2 = 0$$

A solution of the equation is

$$X = C_1 \cos Bx + C_2 \sin Bx$$

Similarly

$$\frac{-1}{Y}\frac{d^2Y}{dy^2} = A^2$$

$$\frac{1}{Y}\frac{d^2Y}{dy^2} + A^2 = 0$$

The solution of this equation is

$$Y = C_3 \cos Ay + C_4 \sin Ay$$

Then $E_z^{\circ} = XY$

$$= (C_1 \cos Bx + C_2 \sin Bx)(C_3 \cos Ay + C_4 \sin Ay)$$

$$= C_1 C_3 \cos Bx \cos Ay + C_1 C_4 \cos Bx \sin Ay$$

$$+ C_2 C_3 \sin Bx \cos Ay + C_2 C_4 \sin Bx \sin Ay$$

The constants C_1, C_2, C_3, C_4, A and B are determined by boundary conditions.

$E_z^{\circ} = 0$ when $x = 0, x = a, y = 0, y = b$.

When $x = 0$, $$E_z^{\circ} = 0$$

$$E_z^{\circ} = C_1 C_3 \cos Ay + C_1 C_4 \sin Ay = 0$$

This is possible only if $C_1 = 0$

Then the general equation is

$$E_z^{\circ} = C_2 C_3 \sin Bx \cos Ay + C_2 C_4 \sin Bx \sin Ay$$

When $y = 0$, $E_z^{\circ} = 0$

$$E_z^{\circ} = C_2 C_3 \sin Bx = 0$$

This is possible only if either $C_2 = 0$ or $C_3 = 0$. If $C_2 = 0$, E_z° is identically zero

So, substituting $C_3 = 0$

$$E_z^{\circ} = C_2 C_4 \sin Bx \sin Ay$$

Let $$C = C_2 C_4$$

$$E_z^{\circ} = C \sin Bx \sin Ay$$

Applying the boundary conditions in order to evaluate the value of constants A and B.

If $x = a$, $$E_z^{\circ} = C \sin Ba \sin Ay = 0$$

This is possible only if $B = \frac{m\pi}{a}$ for all values of y.

$$\therefore B = \frac{m\pi}{a} \quad \text{where} \quad m = 1, 2, 3, \ldots\ldots\ldots$$

If $y = b$, $$E_z^{\circ} = C \sin \frac{m\pi}{a} x \sin A b = 0$$

This is possible only if $A = \frac{m\pi}{b}$ for all values of x.

$$A = \frac{m\pi}{b} \quad \text{where} \quad n = 1, 2, 3$$

Hence $$E_z^{\circ} = C \sin \frac{m\pi}{a} x \sin \frac{m\pi}{b} y$$

For propagation, $\gamma = j\beta$ ($\alpha = 0$), the field expressions are as follows :

$$E_x^{\circ} = \frac{-j\beta C}{h^2} B \cos Bx \sin Ay$$

$$E_y^{\circ} = \frac{-j\beta C}{h^2} A \sin Bx \cos Ay$$

$$H_x^{\circ} = \frac{j\omega\varepsilon C}{h^2} A \sin Bx \cos Ay$$

$$H_y^{\circ} = \frac{-j\omega\varepsilon C}{h^2} B \cos Bx \sin Ay$$

where $$A = \frac{n\pi}{b} \text{ and } B = \frac{m\pi}{a}$$

In the above expressions a and b are the width and height of the waveguide and m and n are integers.

It is known $$B^2 = h^2 - A^2$$

$$\therefore A^2 + B^2 = h^2$$

and $$h^2 = \gamma^2 + \omega^2\mu\varepsilon$$

$$\gamma = \sqrt{h^2 - \omega^2\mu\varepsilon} = \sqrt{A^2 + B^2 - \omega^2\mu\varepsilon}$$

$$\boxed{\gamma = \sqrt{\left(\frac{m\pi}{a}\right)^2 + \left(\frac{n\pi}{b}\right)^2 - \omega^2\mu\varepsilon}}$$

This is the equation of propagation constant for a rectangular guide for TM waves.

Cut-off frequency and cut-off wavelength

Propagation constant is a complex number,

$$\gamma = \alpha + j\beta$$

For low frequencies $\omega^2\mu\varepsilon$ is small. Therefore the propagation constant γ becomes real a number. *i.e.*, $\gamma = \alpha$ ($\because \beta = 0$). It indicates that there won't be any wave propagation.

If the frequency is increased, a value (ω_c) may be reached at which

$$\omega_c^2 \mu\varepsilon = \left(\frac{m\pi}{a}\right)^2 + \left(\frac{n\pi}{b}\right)^2$$

$$\omega_c = \frac{1}{\sqrt{\mu\varepsilon}} \sqrt{\left(\frac{m\pi}{a}\right)^2 + \left(\frac{n\pi}{b}\right)^2}$$

$$\boxed{f_c = \frac{1}{2\pi\sqrt{\mu\varepsilon}} \sqrt{\left(\frac{m\pi}{a}\right)^2 + \left(\frac{n\pi}{b}\right)^2}}$$

$$f_c = \frac{1}{2\sqrt{\mu\varepsilon}} \sqrt{\left(\frac{m}{a}\right)^2 + \left(\frac{n}{b}\right)^2}$$

This is the cut-off frequency. Cut-off frequency is the frequency below which wave propagation will not occur.

The corresponding cut-off wavelength is

$$\lambda_c = \frac{v}{f_c}$$

$$= \frac{v}{\frac{1}{2\pi\sqrt{\mu\varepsilon}}\sqrt{\left(\frac{m\pi}{a}\right)^2 + \left(\frac{n\pi}{b}\right)^2}}$$

$$= \frac{v}{\frac{v}{2}\sqrt{\left(\frac{m}{a}\right)^2 + \left(\frac{n}{b}\right)^2}}$$

$$\boxed{\lambda_c = \frac{2}{\sqrt{\left(\frac{m}{a}\right)^2 + \left(\frac{n}{b}\right)^2}}}$$

If the frequency is greater than the cut-off frequency, the propagation constant γ will be imaginary.

Velocity of propagation

Propagation takes place only when the frequency is greater than the cut-off frequency. The attenuation constant becomes zero.

$$\omega^2\mu\varepsilon > \left(\frac{m\pi}{a}\right)^2 + \left(\frac{n\pi}{b}\right)^2$$

Propagation constant $\gamma = j\beta = j\sqrt{\omega^2\mu\varepsilon - \left(\frac{m\pi}{a}\right)^2 - \left(\frac{n\pi}{b}\right)^2}$

$$\beta = \sqrt{\omega^2\mu\varepsilon - \left(\frac{m\pi}{a}\right)^2 - \left(\frac{n\pi}{b}\right)^2}$$

The velocity of wave propagation in waveguide

$$v = \frac{\omega}{\beta}$$

$$v = \frac{\omega}{\sqrt{\omega^2\mu\varepsilon - \left(\frac{m\pi}{a}\right)^2 - \left(\frac{n\pi}{b}\right)^2}}$$

The corresponding wavelength in the guide

$$\lambda = \frac{v}{f} = \frac{\omega}{f\sqrt{\omega^2\mu\varepsilon - \left(\frac{m\pi}{a}\right)^2 + \left(\frac{n\pi}{b}\right)^2}}$$

$$\lambda = \frac{2\pi}{\sqrt{\omega^2\mu\varepsilon - \left(\frac{m\pi}{a}\right)^2 - \left(\frac{n\pi}{b}\right)^2}} \qquad [\because \omega = 2\pi f]$$

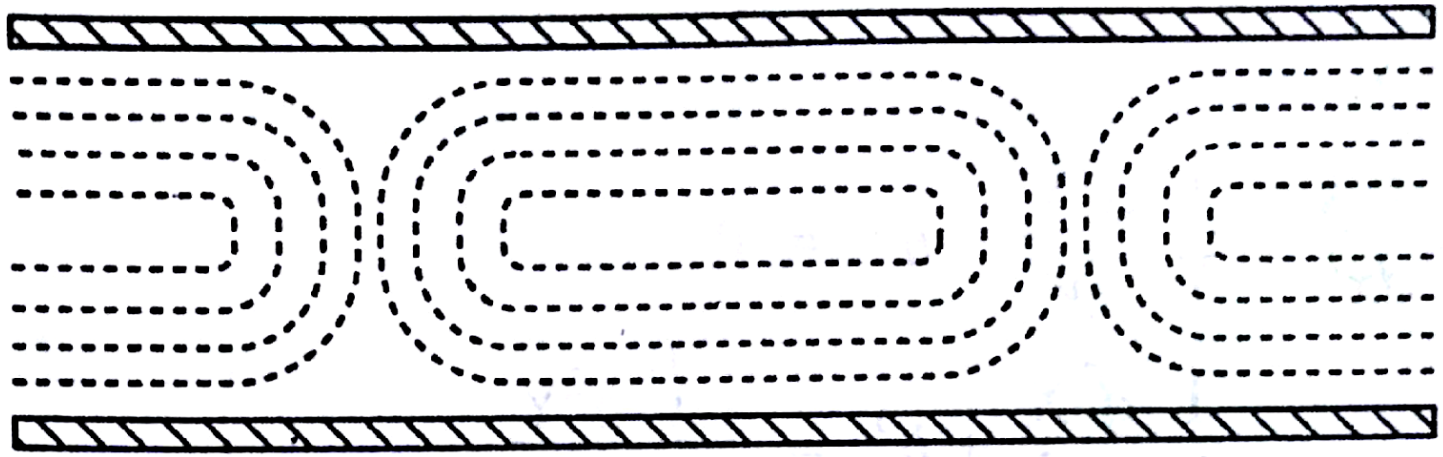

H

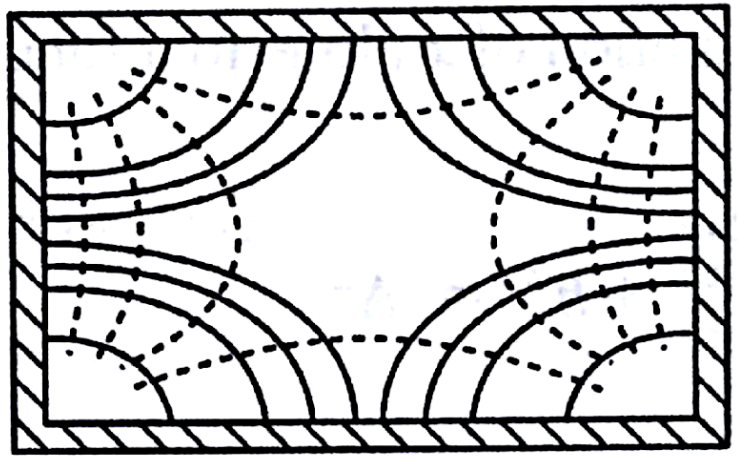

E

Electric field and magnetic field configurations for the dominant mode in a rectangular wave guide

Transverse Electric Waves (TE) in a Rectangular Waveguide

The wave equation in a rectangular waveguide is given by

$$\frac{\partial^2 H_z}{\partial x^2} + \frac{\partial^2 H_z}{\partial y^2} + \gamma^2 H_z = -\omega^2 \mu \varepsilon H_z$$

The solution of the equation is

$$H_z(x, y, z) = \overset{\circ}{H}_z(x, y)\, e^{-\gamma z}$$

Let $$\overset{\circ}{H}_z(x, y) = XY$$

where X is the function of x only.

Y is the function of y only.

Substituting the value of H_z in the wave equation,

$$Y\frac{d^2X}{dx^2} + X\frac{d^2Y}{dy^2} + \gamma^2 XY = -\omega^2 \mu\varepsilon XY$$

$$Y\frac{d^2X}{dx^2} + X\frac{d^2Y}{dy^2} + h^2 XY = 0$$

$$\text{where} \quad h^2 = \gamma^2 + \omega^2\mu\varepsilon$$

Dividing by XY,

$$\frac{1}{X}\frac{d^2X}{dx^2} + \frac{1}{Y}\frac{d^2Y}{dy^2} + h^2 = 0$$

$$\frac{1}{X}\frac{d^2X}{dx^2} + h^2 = \frac{-1}{Y}\frac{d^2Y}{dy^2}$$

The expression relates a function of x alone to a function of y alone and this can be equated to a constant.

$$\frac{1}{X}\frac{d^2X}{dx^2} + h^2 = A^2$$

$$\frac{1}{X}\frac{d^2X}{dx^2} + h^2 - A^2 = 0$$

Let

$$B^2 = h^2 - A^2$$

$$\frac{1}{X}\frac{d^2X}{dx^2} + B^2 = 0$$

The solution of this equation is

$$X = C_1 \cos Bx + C_2 \sin Bx$$

Similarly,

$$-\frac{1}{Y}\frac{d^2Y}{dy^2} = A^2$$

$$\frac{1}{Y}\frac{d^2Y}{dy^2} + A^2 = 0$$

The solution of this equation is $Y = C_3 \cos Ay + C_4 \sin Ay$

But $H_z^{\circ} = XY$

$$= (C_1 \cos Bx + C_2 \sin Bx)(C_3 \cos Ay + C_4 \sin Ay)$$

$$= C_1 C_3 \cos Ay \cos Bx + C_2 C_3 \cos Ay \sin Bx$$
$$+ C_1 C_4 \cos Bx \sin Ay + C_2 C_4 \sin Ay \sin Bx$$

$$E_x = \frac{-\gamma}{h^2}\frac{\partial E_z}{\partial x} - \frac{j\omega\mu}{h^2}\frac{\partial H_z}{\partial y}$$

For TE waves $E_z = 0$.

$$E_x = -\frac{j\omega\mu}{h^2}\frac{\partial H_z}{\partial y}$$

$$= -\frac{j\omega\mu}{h^2}[-C_1 C_3 A \sin Ay \cos Bx - C_2 C_3 A \sin Ay \sin Bx$$

$$+ C_1 C_4 A \cos Bx \cos Ay + C_2 C_4 A \cos Ay \sin Bx]$$

Applying boundary conditions, $E_z = 0$ when $y = 0$, $y = b$

If $y = 0$, the general solution is

$$E_x = -\frac{j\omega\mu}{h^2}[C_1 C_4 A \cos Bx + C_2 C_4 A \sin Bx] = 0$$

For $E_x = 0$, $C_4 = 0$. (C_4 is common)

Then the general solution is

$$E_x = \frac{-j\omega\mu}{h^2}\left[-C_1 C_3 A \sin Ay \sin Bx - C_2 C_3 A \sin Ay \sin Bx\right]$$

If $y = b$, $E_x = 0$.

For $E_x = 0$, it is possible either $B = 0$ or $A = \frac{n\pi}{b}$. If $B = 0$, the above solution is identically zero. So it is better to select $A = \frac{n\pi}{b}$

The general solution is

$$E_x^{\circ} = \frac{j\omega\mu}{h^2}\left[C_1 C_3 A \sin Ay \cos Bx + C_2 C_3 A \sin Ay \sin Bx\right]$$

Similarly for E_y,

$$E_y = \frac{-\gamma}{h^2}\frac{\partial E_z}{\partial y} + \frac{j\omega\mu}{h^2}\frac{\partial H_z}{\partial x}$$

$$= \frac{j\omega\mu}{h^2}\frac{\partial H_z}{\partial x} \qquad [\because E_z = 0]$$

$$= \frac{j\omega\mu}{h^2}[-C_1 C_3 B \cos Ay \sin Bx + C_2 C_3 B \cos Ay \cos Bx -$$

$$C_1 C_4 B \sin Bx \sin Ay + C_2 C_4 B \sin Ay \cos Bx]$$

Applying boundary conditions

$$E_y = 0; \quad x = 0 \text{ and } x = a$$

If $x = 0$,

$$E_y^{\circ} = \frac{j\omega\mu}{h^2}\,[\,C_2\,C_3\,B\cos Ay + C_2\,C_4\,B\sin Ay\,]$$

For $E_y^{\circ} = 0,\ C_2 = 0$

Then the general expression is

$$E_y^{\circ} = \frac{j\omega\mu}{h^2}\,[-C_1\,C_3\,B\cos Ay\sin Bx - C_1\,C_4\,B\sin Bx\sin Ay]$$

If $x = a$, then $E_y^{\circ} = 0$

$$E_y^{\circ} = \frac{-j\omega\mu}{h^2}\,[C_1\,C_3\,B\sin B\,a\cos A\,y + C_1\,C_4\sin B\,a\sin A\,y]$$

For $E_y^\circ = 0,\ B = \frac{m\pi}{a}$

$$E_y^\circ = -\frac{j\omega\mu}{h^2}\left[C_1 C_3 B \sin Bx \cos Ay + C_1 C_4 B \sin Bx \sin Ay\right]$$

$$E_x^\circ = \frac{j\omega\mu}{h^2}\left[C_1 C_3 A \sin Ay \cos Bx + C_2 C_3 A \sin Ay \sin Bx\right]$$

Substituting the value $C_2 = C_4 = 0$

$$E_x^\circ = \frac{j\omega\mu}{h^2} C_1 C_3 A \cos Bx \sin Ay$$

$$= \frac{j\omega\mu}{h^2} C_1 C_3 A \cos\left(\frac{m\pi}{a}\right)x \sin\left(\frac{n\pi}{b}\right)y$$

$$E_y^\circ = -\frac{j\omega\mu}{h^2} C_1 C_3 B \sin Bx \cos Ay$$

$$= -\frac{j\omega\mu}{h^2} C_1 C_3 B \sin\left(\frac{m\pi}{a}\right)x \cos\left(\frac{n\pi}{b}\right)y$$

Let $C = C_1 C_3$

$$E_x^{\circ} = \frac{j\omega\mu}{h^2} C A \sin Ay \cos Bx$$

$$E_y^{\circ} = -\frac{j\omega\mu}{h^2} C B \sin Bx \cos Ay$$

where $$A = \frac{n\pi}{b} \text{ and } B = \frac{m\pi}{a}$$

Similarly for H_x°,

$$H_x^{\circ} = \frac{-\gamma}{h^2}\frac{\partial H_z}{\partial x} + \frac{j\omega\varepsilon}{h^2}\frac{\partial E_z}{\partial y} = \frac{-\gamma}{h^2}\frac{\partial H_z}{\partial x} \qquad [\because E_z = 0]$$

For propagation, $\gamma = j\beta$, $\qquad [\because \alpha = 0]$

$$H_x^{\circ} = -\frac{j\beta}{h^2}\frac{\partial H_z}{\partial x}$$

But

$$E_y = \frac{j\omega\mu}{h^2}\frac{\partial H_z}{\partial x}$$

$$\frac{\partial H_z}{\partial x} = \frac{h^2}{j\omega\mu}\cdot E_y$$

Substituting the value of $\frac{\partial H_z}{\partial x}$ in the above H_x° equation

$$H_x^{\circ} = \frac{-j\beta}{h^2}\cdot\frac{h^2}{j\omega\mu}E_y^{\circ}$$

$$= \frac{-\beta}{\omega\mu}E_y^{\circ}$$

Substituting the value of E_y° in the above H_x° equation

$$H_x^{\circ} = \frac{-\beta}{\omega\mu}\left[\frac{-j\omega\mu}{h^2} C B \sin Bx \cos Ay\right]$$

$$H_x^{\circ} = \frac{j\beta}{h^2} CB \sin Bx \cos Ay$$

$$H_x^{\circ} = \frac{j\beta}{h^2} CB \sin\left(\frac{m\pi}{a}\right)x \cos\left(\frac{n\pi}{b}\right)y$$

Similarly for H_y°,

$$H_y^{\circ} = \frac{-\gamma}{h^2}\frac{\partial H_z}{\partial y} - \frac{j\omega\varepsilon}{h^2}\frac{\partial E_z}{\partial x}$$

$$= \frac{-\gamma}{h^2}\frac{\partial H_z}{\partial y} \qquad [\because E_z = 0]$$

For propagation, $\gamma = j\beta$. $[\because \alpha = 0]$

$$H_y^{\circ} = \frac{-j\beta}{h^2}\frac{\partial H_z}{\partial y}$$

But $E_x = \dfrac{-j\omega\mu}{h^2}\dfrac{\partial H_z}{\partial y}$

$$\frac{\partial H_z}{\partial y} = \frac{-h^2}{j\omega\mu}E_x$$

Substituting this value of $\dfrac{\partial H_z}{\partial y}$ in the above H_y° equation

$$H_y^{\circ} = \frac{-j\beta}{h^2}\frac{(-h^2)}{j\omega\mu}E_x^{\circ} = \frac{\beta}{\omega\mu}E_x^{\circ}$$

Substituting the value of E_x in the above H_y^o equation

$$H_y^o = \frac{\beta}{\omega\mu}\left[\frac{j\omega\mu}{h^2} C A \sin Ay \cos Bx\right]$$

$$H_y^o = \frac{j\beta}{h^2} C A \cos B x \sin A y$$

$$H_y^o = \frac{j\beta}{h^2} C A \cos\left(\frac{m\pi}{a}\right)x \ \sin\left(\frac{n\pi}{b}\right)y$$

$$H_z^o = XY$$

$$= C_1 C_3 \cos Ay \cos Bx + C_2 C_3 \cos Ay \sin Bx$$
$$+ C_1 C_4 \cos Bx \sin Ay + C_2 C_4 \sin Ay \sin Bx$$

But $C_2 = C_4 = 0$

$$H_z^{\circ} = C_1 C_3 \cos Ay \cos Bx$$

$$C = C_1 C_3$$

$$H_z^{\circ} = C \cos Ay \cos Bx$$

$$H_z^{\circ} = C \cos\left(\frac{m\pi}{a}\right)x \cos\left(\frac{n\pi}{b}\right)y$$

The field equations for TE waves are as follows :

$$H_x^{\circ} = \frac{j\beta}{h^2} CB \sin Bx \cos Ay$$

$$H_y^{\circ} = \frac{j\beta}{h^2} CA \cos Bx \sin Ay$$

$$H_z^{\circ} = C \cos Ay \cos Bx$$

$$E_x^{\circ} = \frac{j\omega\mu}{h^2} CA \cos Bx \sin Ay$$

$$E_y^{\circ} = \frac{-j\omega\mu}{h^2} CB \sin Bx \cos Ay$$

where $A = \frac{n\pi}{b}$ and $B = \frac{m\pi}{a}$

For TE waves the equations for β, f_c, λ_c, v and λ are found to be identical to those of TM waves.

$$\beta = \sqrt{\omega^2 \mu\varepsilon - \left(\frac{m\pi}{a}\right)^2 - \left(\frac{n\pi}{b}\right)^2}$$

$$f_c = \frac{1}{2\pi\sqrt{\mu\varepsilon}} \sqrt{\left(\frac{m\pi}{a}\right)^2 + \left(\frac{n\pi}{b}\right)^2}$$

The corresponding cut-off wavelength is

$$\lambda_c = \frac{2}{\sqrt{\left(\frac{m\pi}{a}\right)^2 + \left(\frac{n}{b}\right)^2}}$$

The velocity of propagation

$$v = \frac{\omega}{\beta}$$

$$= \frac{\omega}{\sqrt{\omega^2 \mu\varepsilon - \left(\frac{m\pi}{a}\right)^2 - \left(\frac{n\pi}{b}\right)^2}}$$

$$\lambda = \frac{2\pi}{\sqrt{\omega^2 \mu\varepsilon - \left(\frac{m\pi}{a}\right)^2 - \left(\frac{n\pi}{b}\right)^2}}$$

Impossibility of TEM waves in Waveguides

- Transverse electromagnetic (TEM) wave do not have axial component of either E or H, it cannot propagate within a single conductor waveguide

BESSEL FUNCTIONS

In solving for the electromagnetic fields within the circular waveguides, a differential equation known as Bessel's equation is encountered. The solution of the equation leads to Bessel Functions.

The differential equation has the form

$$\frac{d^2P}{d\rho^2} + \frac{1}{\rho}\frac{dP}{d\rho} + \left(1 - \frac{n^2}{\rho^2}\right) P = 0 \quad \text{where } n = 0, 1, 2, 3, \ldots\ldots\ldots$$

The solution of this Bessel's equation can be obtained by assuming a power series expansion.

$$P = a_0 + a_1 \rho + a_2 \rho^2 + \ldots\ldots\ldots$$

For special case ($n = 0$), the Bessel's equation becomes

$$\frac{d^2P}{\partial\rho^2} + \frac{1}{\rho}\frac{dP}{\partial\rho} + P = 0 \qquad \ldots (5.1)$$

Substituting the value of P in the above equation and equating the sums of the coefficients of each power of ρ to zero.

$$\therefore\ P = P_1 = C_1\left[1 - \left(\frac{\rho}{2}\right)^2 + \frac{\left(\frac{1}{2}\rho\right)^4}{(2!)^2} - \frac{\left(\frac{1}{2}\rho\right)^6}{(3!)^2} + \ldots\ldots\ldots\right]$$

$$= C_1 \sum_{r=0}^{\infty} (-1)^n \frac{\left(\frac{1}{2}\right)^2}{(r!)^2}$$

The series is convergent for all values of ρ either real or complex. This is called Bessel's function of the first kind of order zero and is denoted by $J_0(\rho) = P_0$ for $n = 0$.

The corresponding solutions for $n = 1, 2, 3, \ldots\ldots$ are designated $J_1(\rho)$, $J_2(\rho)$, $J_3(\rho)$, …… where n denotes the order of the Bessel's function. Fig.5.1 shows the Bessel functions of first kind of different orders.

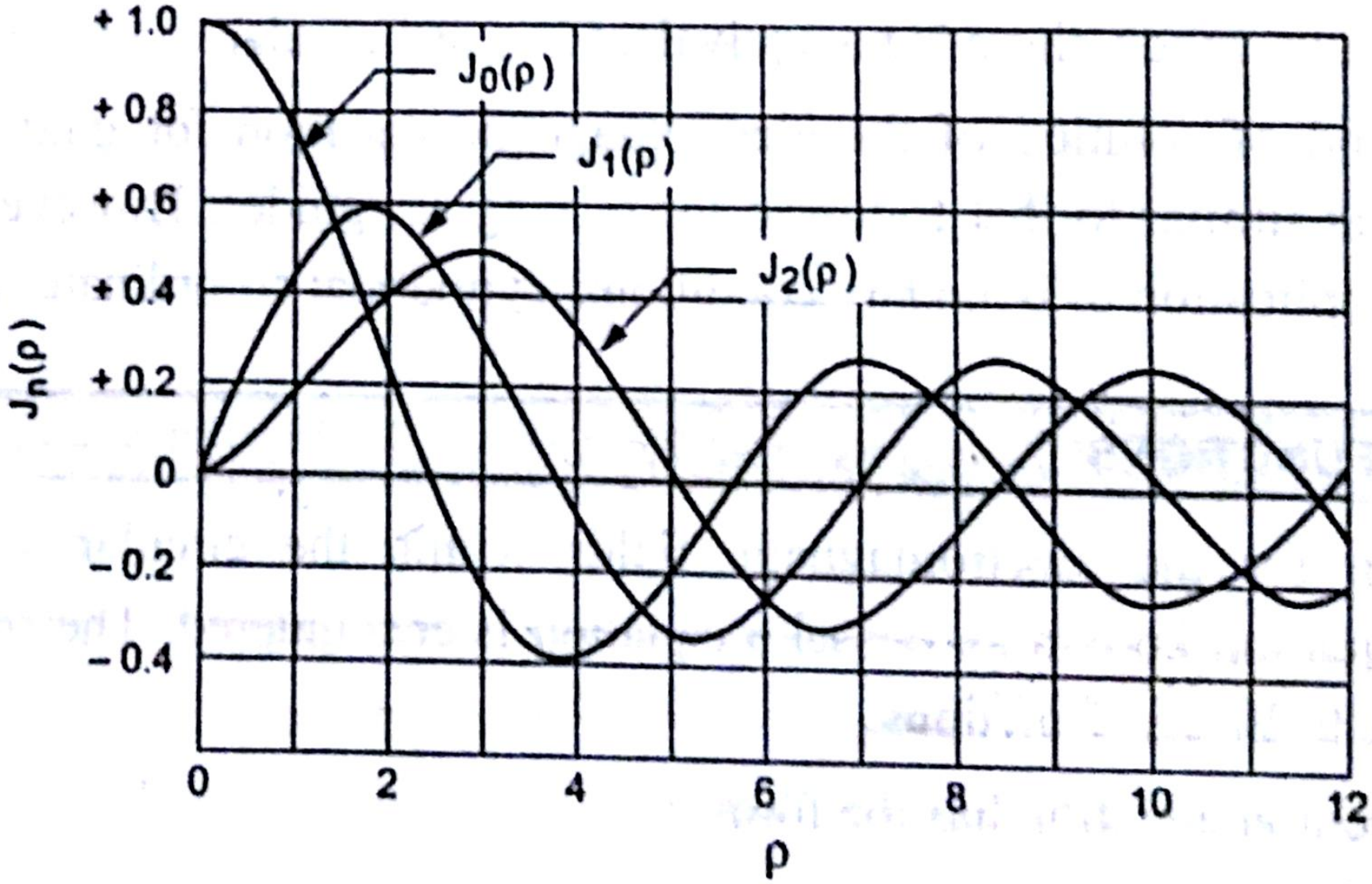

Bessel functions of first kind of different orders

The zero order of the second kind is,

$$N_0(\rho) = \frac{2}{\pi}\left[ln\left(\frac{\rho}{2}\right) + \gamma \right] J_0(\rho) - \frac{2}{\pi} \sum_{r=1}^{\infty} (-)^r \frac{\left(\frac{1}{2}\rho\right)^{2r}}{(r!)^2} \left(1 + \frac{1}{2} + \frac{1}{3} + \ldots + \frac{1}{r}\right)$$

The complete solution of the equation

$$P = A\,J_0(\rho) + B\,N_0(\rho)$$

Fig.5.2 shows the zero order Bessel functions of the first and second kinds

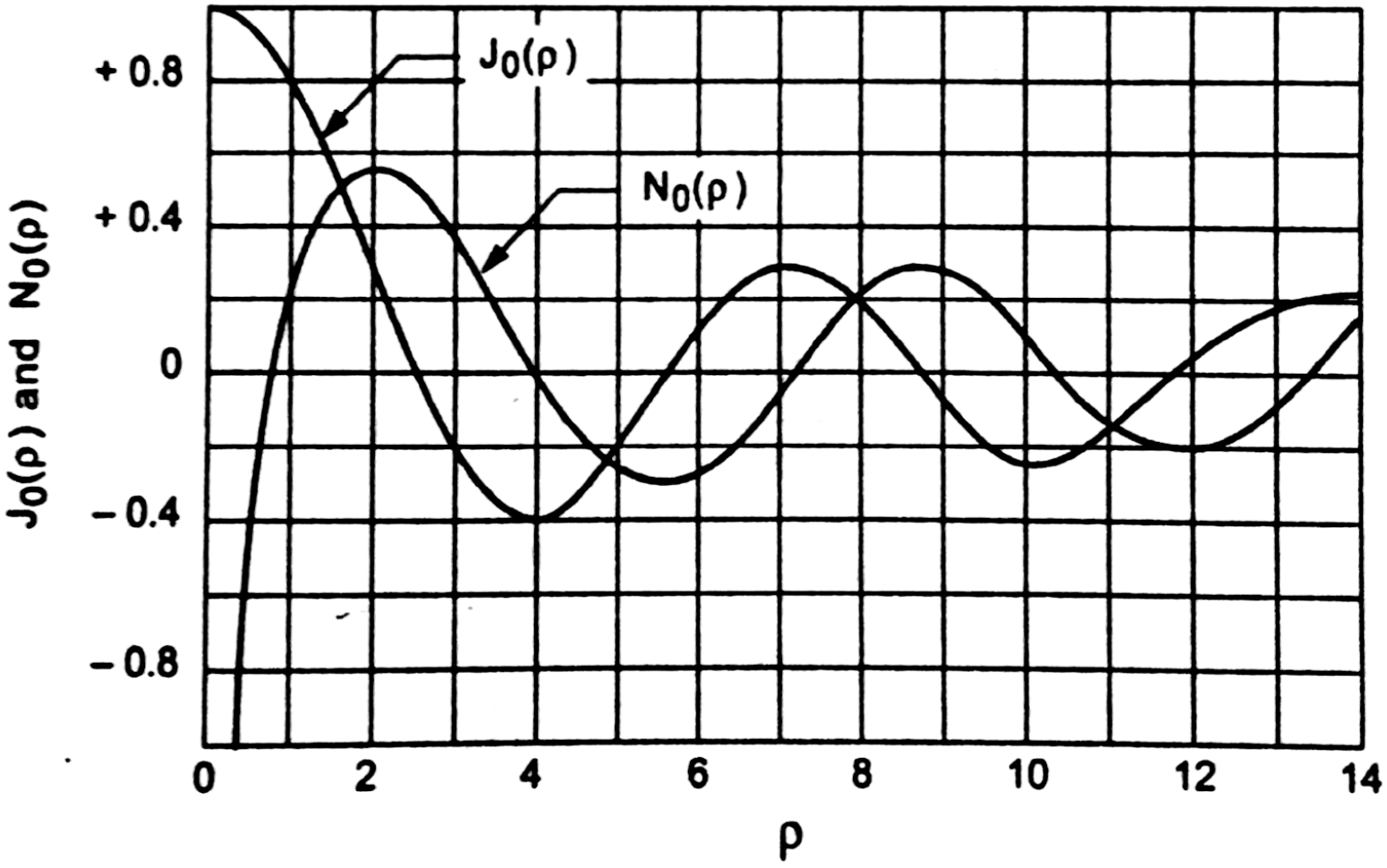

Zero-order Bessel functions of the first and second kinds

TM Waves in Circular waveguide

For Transverse magnetic (TM) waves, H_z is identically zero. The boundary conditions require that E_z must vanish at the surface of the guide.

$$\therefore J_n(ha) = 0$$

where a is the radius of the guide.

There are an infinite number of possible TM waves corresponding to the infinite number of roots of $J_n(ha) = 0$.

The first few roots are

$$(ha)_{01} = 2.405$$
$$(ha)_{11} = 3.85$$
$$(ha)_{02} = 5.52$$
$$(ha)_{12} = 7.02$$

The various TM waves will be referred to as TM_{01}, TM_{11}, *etc.*

The propagation constant $\gamma = \sqrt{h^2 - \omega^2\mu\varepsilon}$

For propagation, $\gamma = j\beta$

$$\beta = \sqrt{\omega^2\mu\varepsilon - h^2_{nm}}$$

The cut-off frequency $\omega_c^2\,\mu\varepsilon = h^2_{nm}$

$$f_c = \frac{h_{nm}}{2\pi\sqrt{\mu\varepsilon}}$$

where $h_{nm} = \dfrac{(ha)_{nm}}{a}$

The phase velocity is $v = \dfrac{\omega}{\beta} = \dfrac{\omega}{\sqrt{\omega^2\mu\varepsilon - h^2_{nm}}}$

The field equations for TM waves are given by

$$h^2 H_\rho = j\frac{\omega\varepsilon}{\rho}\frac{\partial E_z}{\partial \phi}$$

$$h^2 H_\phi = -j\omega\varepsilon\frac{\partial E_z}{\partial \rho}$$

$$h^2 E_\rho = -\gamma\frac{\partial E_z}{\partial \rho}$$

$$h^2 E_\phi = -\frac{\gamma}{\rho}\frac{\partial E_z}{\partial \phi}$$

The expression of E_z for TM wave is

$$E_z^\circ = A_n J_n(h\rho) \cos n\phi$$

$$\frac{\partial E_z^\circ}{\partial \rho} = A_n h \frac{\partial J_n(h\rho)}{\partial \rho} \cos n\phi$$

$$\frac{\partial E_z^\circ}{\partial \phi} = -A_n n J_n(h\rho) \sin n\phi$$

Substituting these values in equations

$$H_\rho^\circ = \frac{-j A_n \omega\varepsilon n J_n(\rho h) \sin n\phi}{h^2 \rho}$$

$$H_\phi^\circ = \frac{-j A_n \omega\varepsilon}{h} \frac{\partial J_n(h\rho)}{\partial \rho} \cos n\phi$$

$$E_\rho^\circ = -j\,\beta\,A_n\,h\frac{\partial J_n(h\rho)}{\partial\rho}\cos n\phi \qquad [\because \gamma = j\beta]$$

$$= \frac{\beta}{\omega\varepsilon}H_\phi^\circ \qquad [\because \gamma = j\beta]$$

$$E_\phi^\circ = \frac{j\beta}{\rho}A_n\,n\,J_n(h\rho)\sin n\phi$$

$$= \frac{-\beta}{\omega\varepsilon}H_\rho^\circ$$

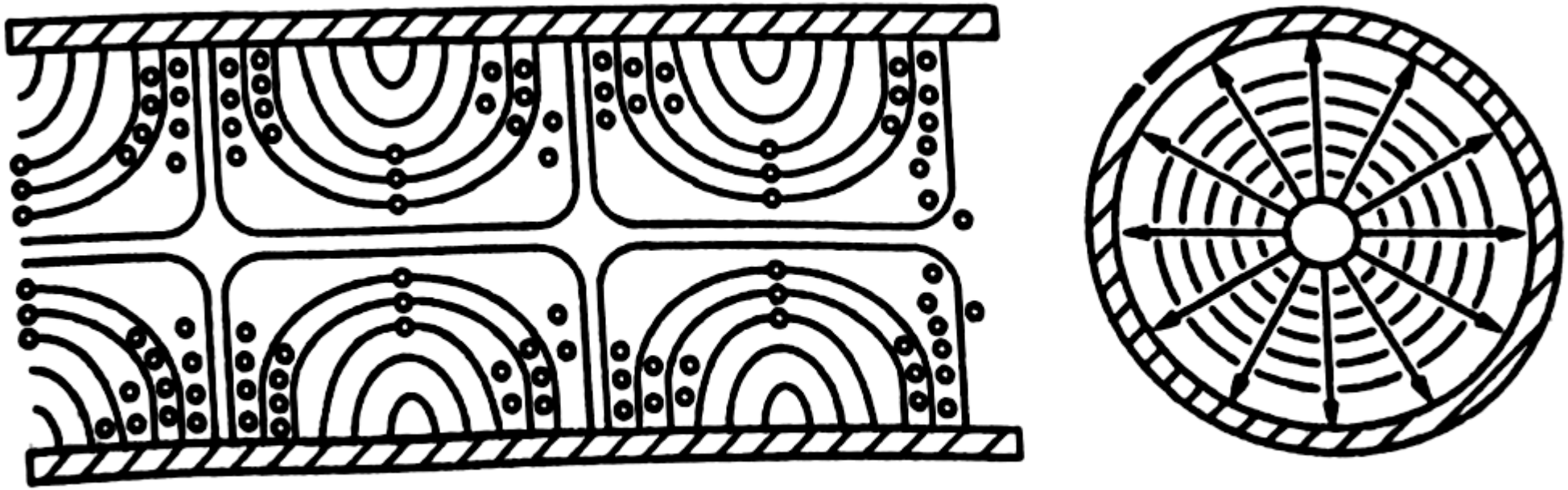

TM_{01}

TM waves in circular waveguide

TE waves in Circular Waveguide

For transverse electric (TE) waves, E_z is identically zero. The field equations for TE waves are given by the equations

$$h^2 H_\rho = -\gamma \frac{\partial H_z}{\partial \rho}$$

$$h^2 H_\phi = -\frac{\gamma}{\rho} \frac{\partial H_z}{\partial \phi}$$

$$h^2 E_\rho = \frac{-j\omega\mu}{\rho} \frac{\partial H_z}{\partial \phi}$$

$$h^2 E_\phi = j\omega\mu \frac{\partial H_z}{\partial \rho}$$

The expression of H_z for TE waves is

$$H_z^\circ = C_n J_n(\rho h) \cos n\phi$$

$$\frac{\partial H_z^\circ}{\partial \rho} = C_n \frac{h \partial J_n(\rho h)}{\partial \rho} \cos n\phi$$

$$\frac{\partial H_z^\circ}{\partial \phi} = -C_n n J_n(\rho h) \sin n\phi$$

Substituting these derivatives in equations

$$H_\rho^\circ = \frac{-j \beta C_n}{h} \frac{\partial J_n(\rho h)}{\partial \rho} \cos n\phi$$

$$H_\phi^\circ = \frac{j \beta n C_n}{h^2 \rho} J_n(\rho h) \sin n\phi$$

$$E_\rho^\circ = \frac{j\omega\mu}{\rho h^2} C_n n J_n(\rho h) \sin n\phi = \frac{\omega\mu}{\beta} H_\phi^\circ$$

$$E_\phi^\circ = \frac{j\omega\mu}{h} C_n \frac{\partial J_n(\rho h)}{\partial \rho} \cos n\phi$$

$$= \frac{-\omega\mu}{\beta} H_\rho^\circ$$

The boundary condition is $E_\phi = 0$ at $\rho = a$. Since E_ϕ is proportional to $\frac{\partial H_z}{\partial \rho}$, $\frac{\partial J_n(ha)}{\partial \rho} = 0$.

$$J_n'(ha) = 0$$

The first few roots of this equation are

$$(ha)'_{01} = 3.83$$
$$(ha)'_{11} = 1.84$$
$$(ha)'_{02} = 7.02$$
$$(ha)'_{12} = 5.33$$

The corresponding TE waves are referred to as TE_{01}, TE_{11}, TE_{02} and TE_{12}.

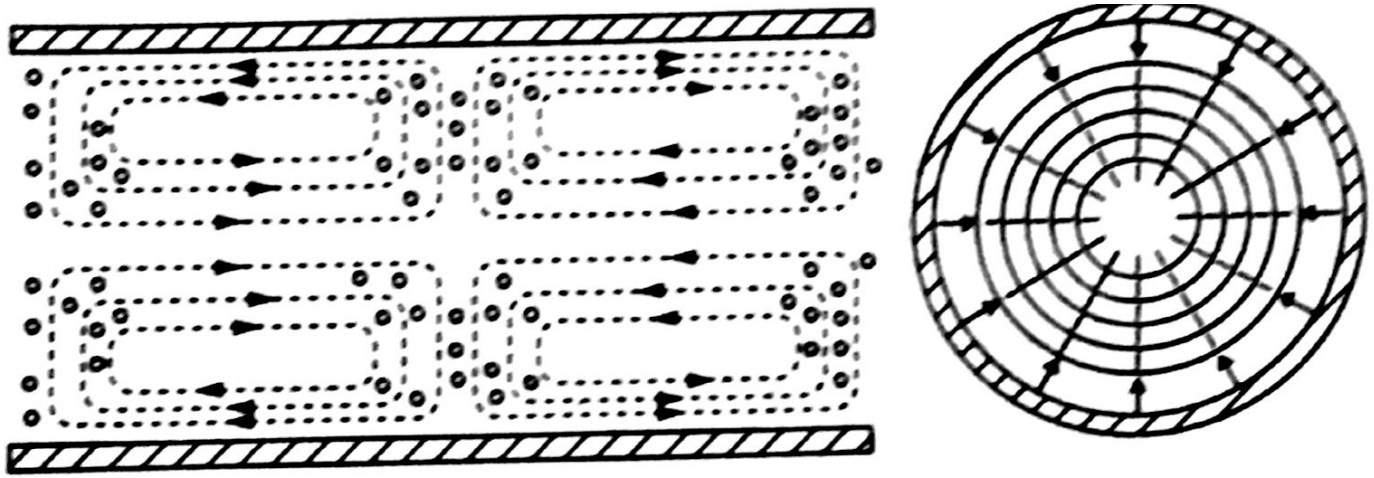

TE_{01} Wave

E

TM waves in circular waveguide

WAVEGUIDE CAVITY RESONATORS

Waveguide cavity resonators are formed by shorting the two ends of a section of a waveguide. Waveguide cavity resonators are :

1. Rectangular cavity resonator
2. Circular cavity resonator

RECTANGULAR CAVITY RESONATOR

The geometry of the rectangular cavity resonator is shown in Fig.

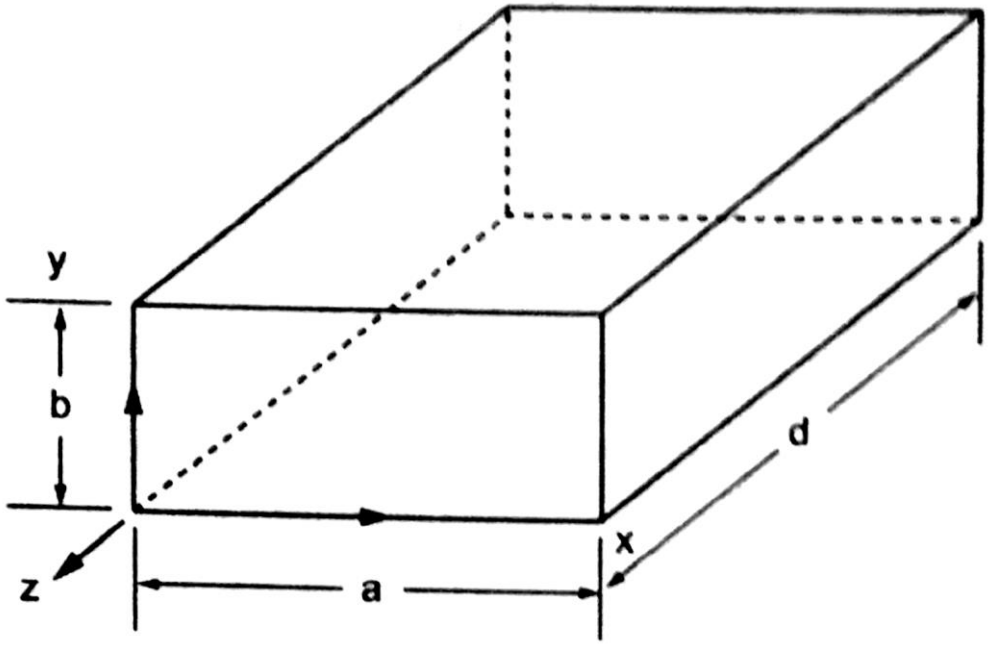

Rectangular cavity resonator

Transverse Electric (TE_{mnp}) Mode :

The magnetic field expression in the z direction is given by

$$H_z = H_0 \cos\left(\frac{m\pi x}{a}\right) \cos\left(\frac{n\pi y}{b}\right) \sin\left(\frac{p\pi z}{d}\right)$$

where $m = 0, 1, 2, 3, \ldots$ represents the number of the half wave periodicity in the x direction.

$n = 0, 1, 2, 3, \ldots$ represents the number of the half wave periodicity in the y direction.

$p = 1, 2, 3, 4, \ldots$ represents the number of the half wave periodicity in the z direction.

The electric field in the z direction is

$$E_z = 0$$

The magnetic field in the x direction is

$$H_x = \frac{1}{h^2}\frac{\partial^2 H_z}{\partial x\,\partial z}$$

where $h^2 = \left(\frac{m\pi}{a}\right)^2 + \left(\frac{n\pi}{b}\right)^2 + \left(\frac{p\pi}{d}\right)^2$

$$H_x = \frac{1}{h^2}\frac{\partial^2}{\partial x\,\partial z}\left[H_0 \cos\left(\frac{m\pi x}{a}\right)\cos\left(\frac{n\pi y}{b}\right)\sin\left(\frac{p\pi z}{d}\right)\right]$$

$$= \frac{H_0}{h^2}\frac{\partial}{\partial x}\left[\cos\left(\frac{m\pi x}{a}\right)\cos\left(\frac{n\pi y}{b}\right)\cos\left(\frac{p\pi z}{d}\right)\frac{p\pi}{d}\right]$$

$$H_x = \frac{-H_0}{h^2}\left[\left(\frac{p\pi}{d}\right)\left(\frac{m\pi}{a}\right)\sin\left(\frac{m\pi x}{a}\right)\cos\left(\frac{n\pi y}{b}\right)\cos\left(\frac{p\pi z}{d}\right)\right]$$

The magnetic field in the y direction is

$$H_y = -\frac{1}{h^2}\frac{\partial^2 H_z}{\partial y\,\partial z}$$

$$= -\frac{1}{h^2}\frac{\partial^2}{\partial y\,\partial z}\left[H_0\cos\left(\frac{m\pi x}{a}\right)\cos\left(\frac{n\pi y}{b}\right)\sin\left(\frac{p\pi z}{d}\right)\right]$$

$$= -\frac{H_0}{h^2}\frac{\partial}{\partial y}\left[\cos\left(\frac{m\pi x}{a}\right)\cos\left(\frac{n\pi y}{b}\right)\cos\left(\frac{p\pi z}{d}\right)\frac{p\pi}{d}\right]$$

$$= \frac{H_0}{h^2}\left[\left(\frac{p\pi}{d}\right)\left(\frac{n\pi}{b}\right)\cos\left(\frac{m\pi x}{a}\right)\sin\left(\frac{n\pi y}{b}\right)\cos\left(\frac{p\pi z}{d}\right)\right]$$

The electric field in the x direction is

$$E_x = \frac{-j\omega\mu}{h^2}\frac{\partial H_z}{\partial y}$$

$$= \frac{-j\omega\mu}{h^2}\frac{\partial}{\partial y}\left[H_0 \cos\left(\frac{m\pi x}{a}\right)\cos\left(\frac{n\pi y}{b}\right)\sin\left(\frac{p\pi z}{d}\right)\right]$$

$$E_x = \frac{j\omega\mu H_0}{h^2}\left(\frac{n\pi}{b}\right)\cos\left(\frac{m\pi x}{a}\right)\sin\left(\frac{n\pi y}{b}\right)\sin\left(\frac{p\pi z}{d}\right)$$

The electric field in the y direction is

$$E_y = \frac{j\omega\mu}{h^2}\frac{\partial H_z}{\partial x}$$

$$= \frac{j\omega\mu}{h^2} \frac{\partial}{\partial x} \left[H_0 \cos\left(\frac{m\pi x}{a}\right) \cos\left(\frac{n\pi y}{b}\right) \sin\left(\frac{p\pi z}{d}\right) \right]$$

$$= \frac{-j\omega\mu H_0}{h^2} \left(\frac{m\pi}{a}\right) \sin\left(\frac{m\pi x}{a}\right) \cos\left(\frac{n\pi y}{b}\right) \sin\left(\frac{p\pi z}{d}\right)$$

Transverse magnetic (TM_{mnp}) Mode :

The electric field in the z direction is given by

$$E_z = E_0 \sin\left(\frac{m\pi x}{a}\right) \sin\left(\frac{n\pi y}{b}\right) \cos\left(\frac{p\pi z}{d}\right)$$

where $m = 0, 1, 2, 3, \ldots\ldots$

$n = 0, 1, 2, 3, \ldots\ldots$

$p = 1, 2, 3, 4, \ldots\ldots$

Magnetic field in the z direction is

$$H_z = 0$$

The electric field in the x direction is

$$E_x = \frac{1}{h^2} \frac{\partial^2 E_z}{\partial x \, \partial z}$$

where $$h^2 = \left(\frac{m\pi}{a}\right)^2 + \left(\frac{n\pi}{b}\right)^2 + \left(\frac{p\pi}{d}\right)^2$$

$$E_x = \frac{1}{h^2} \frac{\partial^2}{\partial x \, \partial z} \left[E_0 \sin\left(\frac{m\pi x}{a}\right) \sin\left(\frac{n\pi y}{b}\right) \cos\left(\frac{p\pi z}{d}\right) \right]$$

$$= \frac{-E_0}{h^2} \frac{\partial}{\partial x} \left[\sin\left(\frac{m\pi x}{a}\right) \sin\left(\frac{n\pi y}{b}\right) \sin\left(\frac{p\pi z}{d}\right) \frac{p\pi}{d} \right]$$

$$E_x = \frac{-E_0}{h^2}\left(\frac{p\pi}{d}\right)\left(\frac{m\pi}{a}\right)\cos\left(\frac{m\pi x}{a}\right)\sin\left(\frac{n\pi y}{b}\right)\sin\left(\frac{p\pi z}{d}\right)$$

The electric field in the y direction is

$$E_y = \frac{1}{h^2}\frac{\partial^2 E_z}{\partial y\,\partial z}$$

$$= \frac{1}{h^2}\frac{\partial}{\partial y\,\partial z}\left[E_0 \sin\left(\frac{m\pi x}{a}\right)\sin\left(\frac{n\pi y}{b}\right)\cos\left(\frac{p\pi z}{d}\right)\right]$$

$$= \frac{-E_0}{h^2}\frac{\partial}{\partial y}\left[\sin\left(\frac{m\pi x}{a}\right)\sin\left(\frac{n\pi y}{b}\right)\sin\left(\frac{p\pi z}{d}\right)\frac{p\pi}{d}\right]$$

$$E_y = \frac{-E_0}{h^2}\left(\frac{p\pi}{d}\right)\left(\frac{n\pi}{b}\right)\sin\left(\frac{m\pi x}{a}\right)\cos\left(\frac{n\pi y}{b}\right)\sin\left(\frac{p\pi z}{d}\right)$$

The magnetic field in the x direction is

$$H_x = \frac{j\omega\varepsilon}{h^2}\frac{\partial E_z}{\partial x}$$

$$= \frac{j\omega\varepsilon}{h^2}\frac{\partial}{\partial y}\left[E_0 \sin\left(\frac{m\pi x}{a}\right)\sin\left(\frac{n\pi y}{b}\right)\cos\left(\frac{p\pi z}{d}\right)\right]$$

The magnetic field in the y direction is

$$H_y = \frac{-j\omega\varepsilon}{h^2}\frac{\partial E_z}{\partial x}$$

$$= \frac{-j\omega\varepsilon}{h^2}\frac{\partial}{\partial x}\left[E_0 \sin\left(\frac{m\pi x}{a}\right)\sin\left(\frac{n\pi y}{b}\right)\cos\left(\frac{p\pi z}{d}\right)\right]$$

$$H_y = \frac{-j\omega\varepsilon E_0}{h^2}\left(\frac{m\pi}{a}\right)\cos\left(\frac{m\pi x}{a}\right)\sin\left(\frac{n\pi y}{b}\right)\cos\left(\frac{p\pi z}{d}\right)$$

For either TE_{mnp} or TM_{mnp} mode :

At resonance

$$\omega_0^2 \mu\varepsilon = h^2$$

$$= \left(\frac{m\pi}{a}\right)^2 + \left(\frac{n\pi}{b}\right)^2 + \left(\frac{p\pi}{d}\right)^2$$

$$\omega_0 = \frac{1}{\sqrt{\mu\varepsilon}} \sqrt{\left(\frac{m\pi}{a}\right)^2 + \left(\frac{n\pi}{b}\right)^2 + \left(\frac{p\pi}{d}\right)^2}$$

Resonant frequency is given by

$$f_0 = \frac{1}{2\pi\sqrt{\mu\varepsilon}} \sqrt{\left(\frac{m\pi}{a}\right)^2 + \left(\frac{n\pi}{b}\right)^2 + \left(\frac{p\pi}{d}\right)^2}$$

$$f_0 = \frac{1}{2\sqrt{\mu\varepsilon}} \sqrt{\left(\frac{m}{a}\right)^2 + \left(\frac{n}{b}\right)^2 + \left(\frac{p}{d}\right)^2}$$

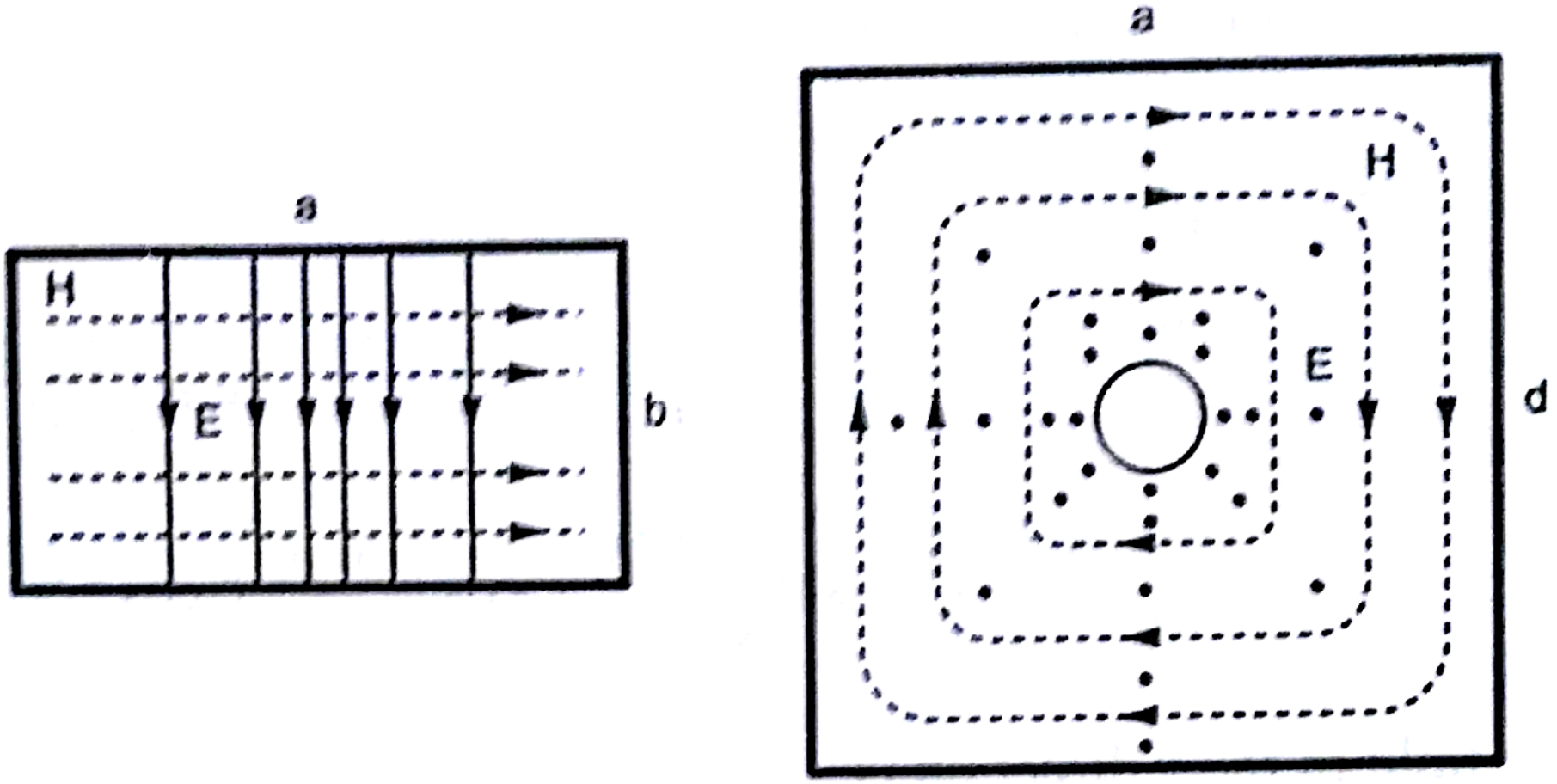

Rectangular cavity dominant mode field configuration (TE_{101})

Circular cavity resonator

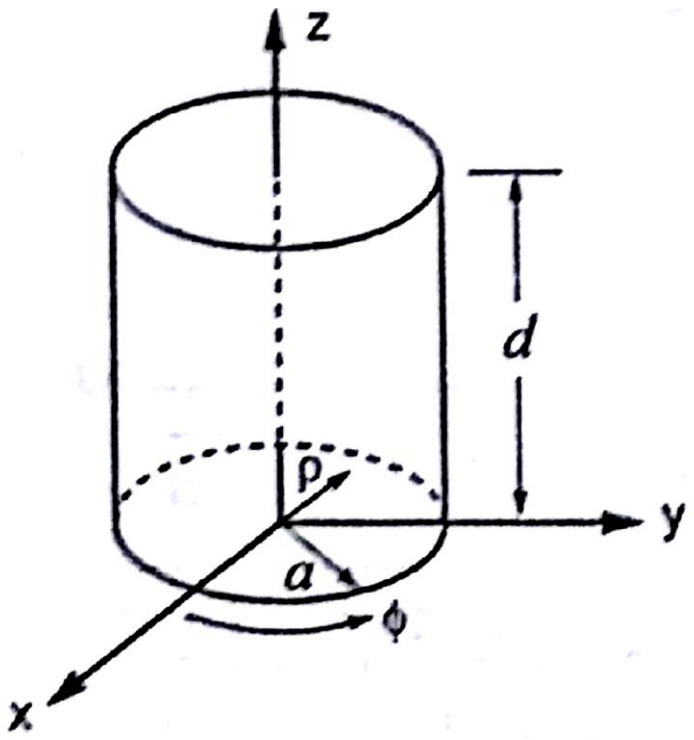

Circular cavity resonator

Transverse electric (TE_{nmp}) mode :

The magnetic field intensity in the z direction is given by

$$H_z = H_0 J_n\left(\frac{x'_{nm}\,\rho}{a}\right)\cos(n\phi)\sin\left(\frac{p\pi z}{d}\right)$$

where J_n is the Bessel's function of the first kind,

H_0 is the amplitude of the magnetic field,

$m = 0, 1, 2, 3, \ldots$ is the number of periodicity in the ϕ direction,

$n = 1, 2, 3, 4, \ldots$ is the number of zeros of the field in the radial (ρ) direction,

$p = 1, 2, 3, 4, \ldots$ is the number of half waves in the axial (z) direction,

$$\frac{x'_{nm}}{a} = h$$

x_{nm} is the mth root of equation $J_n(ha) = 0$

The other field components in ρ, ϕ and z directions are

$$E_z = 0$$

$$H_\phi = -H_0 \left(\frac{p\pi}{d}\right)\left(\frac{n}{\rho}\right)\left(\frac{a}{x'_{nm}}\right)^2 J_n\left(\frac{x'_{nm}\rho}{a}\right)\sin(n\phi)\cos\left(\frac{p\pi z}{d}\right)$$

$$H_\rho = H_0 \left(\frac{p\pi}{d}\right)\left(\frac{a}{x'_{nm}}\right) J'_n\left(\frac{x'_{nm}\rho}{a}\right)\cos(n\phi)\cos\left(\frac{p\pi z}{d}\right)$$

$$E_\phi = j H_0 \omega\mu \left(\frac{a}{x'_{nm}}\right) J'_n\left(\frac{x'_{nm}\rho}{a}\right)\cos(n\phi)\sin\left(\frac{p\pi z}{d}\right)$$

$$E_\rho = j H_0 \omega\mu \left(\frac{n}{\rho}\right)\left(\frac{a}{x'_{nm}}\right)^2 J_n\left(\frac{x'_{nm}\rho}{a}\right)\sin(n\phi)\sin\left(\frac{p\pi z}{d}\right)$$

Transverse magnetic TM_{nmp} mode :

The electric field intensity in the z direction is given by

$$E_z = E_0 J_n\left(\frac{x_{nm}\rho}{a}\right)\cos(n\phi)\cos\left(\frac{p\pi z}{d}\right)$$

The other field components in ρ, ϕ, z directions are :

$$H_z = 0$$

$$E_\phi = E_0\left(\frac{p\pi}{d}\right)\left(\frac{n}{\rho}\right)\left(\frac{a}{x_{nm}}\right)^2 J_n\left(\frac{x_{nm}\rho}{a}\right)\sin(n\phi)\sin\left(\frac{p\pi z}{d}\right)$$

$$E_\rho = -E_0\left(\frac{p\pi}{d}\right)\left(\frac{a}{x_{nm}}\right)J'_n\left(\frac{x_{nm}\rho}{a}\right)\cos(n\phi)\sin\left(\frac{p\pi z}{d}\right)$$

$$H_\phi = -j\, E_0\, \omega\varepsilon \left(\frac{a}{x_{nm}}\right) J'_n \left(\frac{x_{nm}\,\rho}{a}\right) \cos(n\phi) \cos\left(\frac{p\pi z}{d}\right)$$

$$H_\rho = -j\, E_0\, \omega\varepsilon \left(\frac{a}{x_{nm}}\right)^2 J_n \left(\frac{x_{nm}\,\rho}{a}\right) \sin(n\phi) \cos\left(\frac{p\pi z}{d}\right)$$

where J_n is the Bessel's function,

E_0 is the amplitude of the electric field,

$m = 0, 1, 2, 3, \ldots\ldots\ldots$

$n = 1, 2, 3, 4, \ldots\ldots\ldots$

$p = 1, 2, 3, 4, \ldots\ldots\ldots$

$$\frac{x'_{nm}}{a} = h$$

x_{nm} is the mth root of equation $J_n(ha) = 0$

Resonant frequency :

For TE_{nmp} mode :

At resonance, $$\omega_0^2 \mu\varepsilon = h^2$$

Since $$h^2 = \left(\frac{x'_{nm}}{a}\right)^2 + \left(\frac{p\pi}{d}\right)^2$$

$$\omega_0^2 \mu\varepsilon = \left(\frac{x'_{nm}}{a}\right)^2 + \left(\frac{p\pi}{d}\right)^2$$

$$\omega_0 = \frac{1}{\sqrt{\mu\varepsilon}} \sqrt{\left(\frac{x'_{nm}}{a}\right)^2 + \left(\frac{p\pi}{d}\right)^2}$$

The resonant frequency for TE mode :

$$\boxed{f_0 = \frac{1}{2\pi\sqrt{\mu\varepsilon}} \sqrt{\left(\frac{x'_{nm}}{a}\right)^2 + \left(\frac{p\pi}{d}\right)^2}}$$

For TM_{nmp} mode :

At resonance, $\omega_0^2 \mu\varepsilon = h^2$

Since
$$h^2 = \left(\frac{x_{nm}}{a}\right)^2 + \left(\frac{p\pi}{d}\right)^2$$

$$\omega_0^2 \mu\varepsilon = \left(\frac{x_{nm}}{a}\right)^2 + \left(\frac{p\pi}{d}\right)^2$$

$$\omega_0 = \frac{1}{\sqrt{\mu\varepsilon}} \sqrt{\left(\frac{x_{nm}}{a}\right)^2 + \left(\frac{p\pi}{d}\right)^2}$$

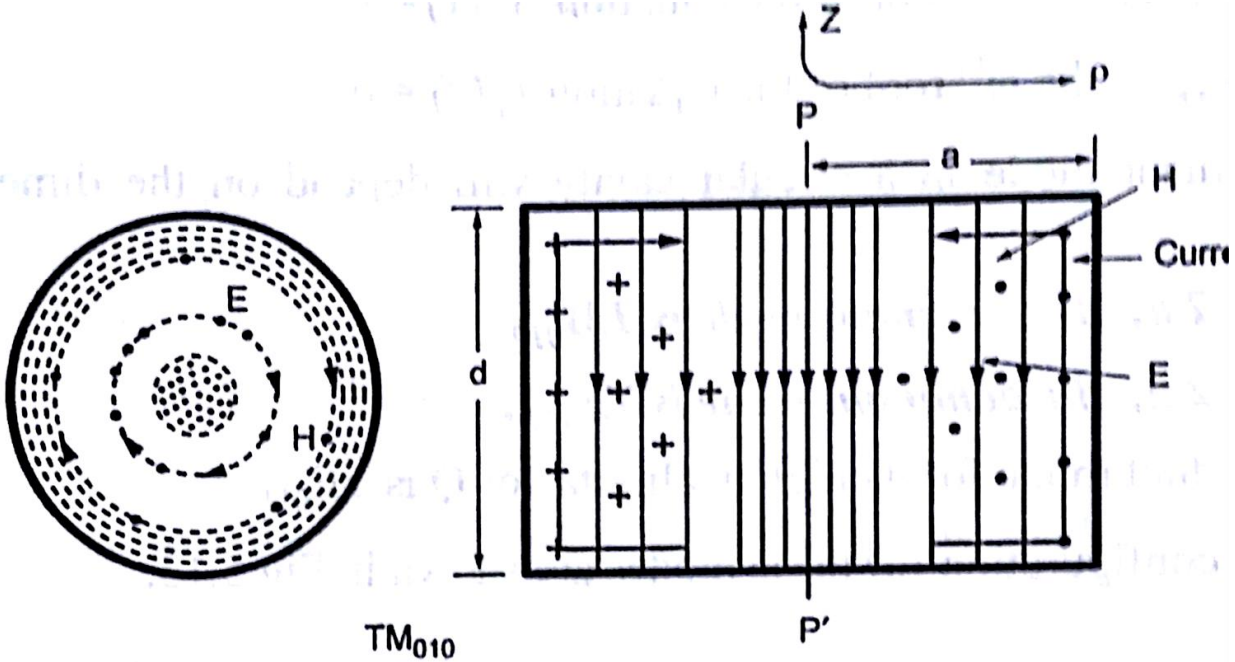

TM_{010}

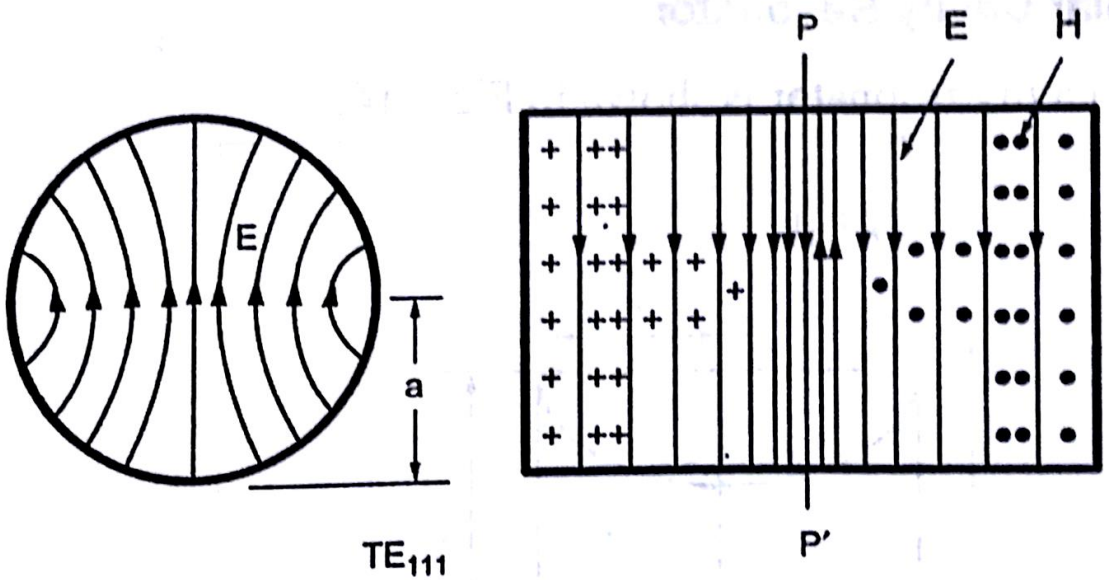

TE_{111}

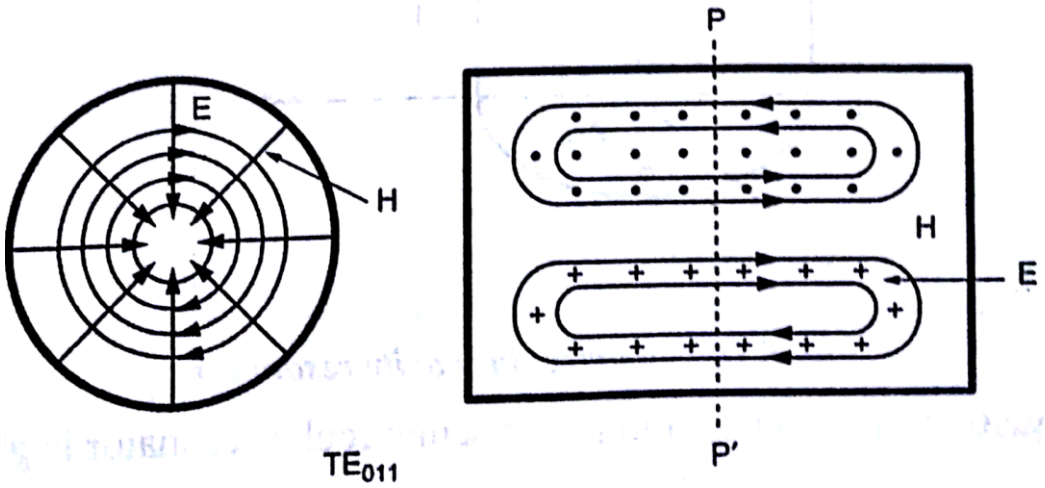

Circular cavity field configurations

(Left hand side is the cross-section through PP′)

The resonant frequency for TM mode :

$$\boxed{f_0 = \frac{1}{2\pi\sqrt{\mu\varepsilon}}\sqrt{\left(\frac{x_{nm}}{a}\right)^2 + \left(\frac{p\pi}{d}\right)^2}}$$

where x'_{nm} is the mth root of the equation $J'_n(x) = 0$,

x_{nm} is the mth root of the equation $J_n(x) = 0$.

The dominant mode in a circular cavity will depend on the dimensions of the cavity.

For $d < 2a$, the dominant mode is TM_{010}

For $d \geq 2a$, the dominant mode is TE_{111}.

The important mode for its high quality factor Q is TE_{011} .

. A rectangular waveguide of cross section 5 cm × 2 cm is used to propagate TM_{11} mode at 10 GHz. Determine the cutoff wavelength. [November 2011]

Given: $a = 5$ cm $\quad b = 2$ cm

TM_{11} mode, $m = 1,\ n = 1$

$$\lambda_C = \frac{2}{\sqrt{\left(\frac{m}{a}\right)^2 + \left(\frac{n}{b}\right)^2}} = \frac{2}{\sqrt{\left(\frac{1}{5}\right)^2 + \left(\frac{1}{2}\right)^2}} = 3.714\,cm$$

A rectangular waveguide has the following dimensions l = 2.54 cm, b = 1.27 cm. Calculate the cutoff frequency for TE_{11} mode. **[November 2006]**

Given: $a = 2.54$ cm $\quad b = 1.27$ cm

TE_{11} mode $m = 1,\ n = 1.$

The cutoff frequency is given by,

$$f_C = \frac{1}{2\pi\sqrt{\mu\varepsilon}}\sqrt{\left(\frac{m\pi}{a}\right)^2 + \left(\frac{n\pi}{b}\right)^2} = \frac{V}{2}\sqrt{\left(\frac{m}{a}\right)^2 + \left(\frac{n}{b}\right)^2}$$

$$f_C = \frac{3\times10^8}{2}\sqrt{\left[\frac{1}{2.54\times10^{-2}}\right]^2 + \left[\frac{1}{1.27\times10^{-2}}\right]^2}$$

where $V = 3 \times 10^8$ m/s

$$f_C = 13.205 \text{ GHz.}$$

A rectangular waveguide mesures 3 x 4.5 cm internally and has a 10 GHz signal propagated in it. Calculate the cutoff wavelength, the guide wavelength and the characteristic impedance for TE_{10} mode [Dominant mode]. [November/December 2007]

Given: $a = 4.5$ cm, $b = 3$ cm, $f = 10$ GHz

TE_{10} mode, $m = 1$, $n = 0$.

i) The wavelength is free space,

$$\lambda_0 = \frac{V}{f} = \frac{3\times10^8}{10\times10^9} = 0.03\,m$$

ii) The cutoff wavelength is given by,

$$\lambda_C = \frac{2}{\sqrt{\left(\frac{m}{a}\right)^2 + \left(\frac{n}{b}\right)^2}} = \frac{2}{\sqrt{\left(\frac{1}{4.5\times10^{-2}}\right)^2 + 0}} \qquad \lambda_C = 0.09\,m$$

iii) The guide wavelength is given by,

$$\lambda_g = \frac{\lambda_0}{\sqrt{1-\left(\frac{\lambda_0}{\lambda_C}\right)^2}} = \frac{0.03}{\sqrt{1-\left(\frac{0.03}{0.09}\right)^2}} = 0.0318\,m$$

iv) Wave impedance is given by,

$$Z_{0H} = \frac{\eta}{\sqrt{1-\left(\frac{f_C}{f}\right)^2}}$$

$$f_c = \frac{V}{2}\sqrt{\left(\frac{m}{a}\right)^2} = \frac{3\times10^8}{2}\sqrt{\left(\frac{1}{4.5\times10^{-2}}\right)^2} = 3.3\ \text{GHz}$$

$$Z_{OIE} = \frac{\eta}{\sqrt{1-\left(\frac{3.3}{10}\right)^2}} = \frac{377}{0.9428} = 399.87\,\Omega$$

$$Z_{OIE} = 399.8\,\Omega$$

UNIT V RF SYSTEM DESIGN CONCEPTS

Active RF components: Semiconductor basics in RF, bipolar junction transistors, RF field effect transistors, High electron mobility transistors Basic concepts of RF design, Mixers, Low noise amplifiers, voltage control oscillators, Power amplifiers, transducer power gain and stability considerations

Active RF components: Semiconductor basics in RF

The operation of the semiconductor devices depends on the physical behaviour of the semiconductor used. The most commonly used semiconductors are germanium (Ge), silicon (Si) and gallium arsenide (GaAs). When the temperature is zero degree Kelvin ($T°K = 0$) all the electrons are bonded to their atoms and the semiconductor behaves like insulator. When the temperature increases, some electrons attains sufficient energy to break up the covalent bond and cross the energy gap $E_g = E_C - E_V$. At room temperature, the band gap energy $E_g = 0.62$ eV for Ge, $E_g = 1.12$ eV for Si and $E_g = 1.42$ eV for GaAs. When an electron breaks the covalent bond, it tends behind a positive charge vacancy which is called hole.

Let n be the concentration of conduction electrons

p be the concentration of holes

The concentration obey Fermi statistics.

$$n = N_C e^{\frac{E_C - E_F}{kT}}$$

$$p = N_V e^{\frac{E_C - E_F}{kT}}$$

Where N_C is the effective carrier concentration in conduction band

N_V is the effective carrier concentration in valence band

E_F is the Fermi energy level

k is the Boltzmann's constant

In an intrinsic semiconductor, the number of free electrons produced by thermal excitation is equal to the number of holes.

i.e., $$n = p = n_i$$

$$np = n_i^2$$

In a semiconductor both electrons and holes are contributing to the conductivity of the material. The conductivity (σ) is given by

$$\sigma = q\,n\,\mu_n + q\,p\,\mu_p$$

where q is the charge of particle

μ_n is the mobility of electrons

μ_p is the mobility of holes

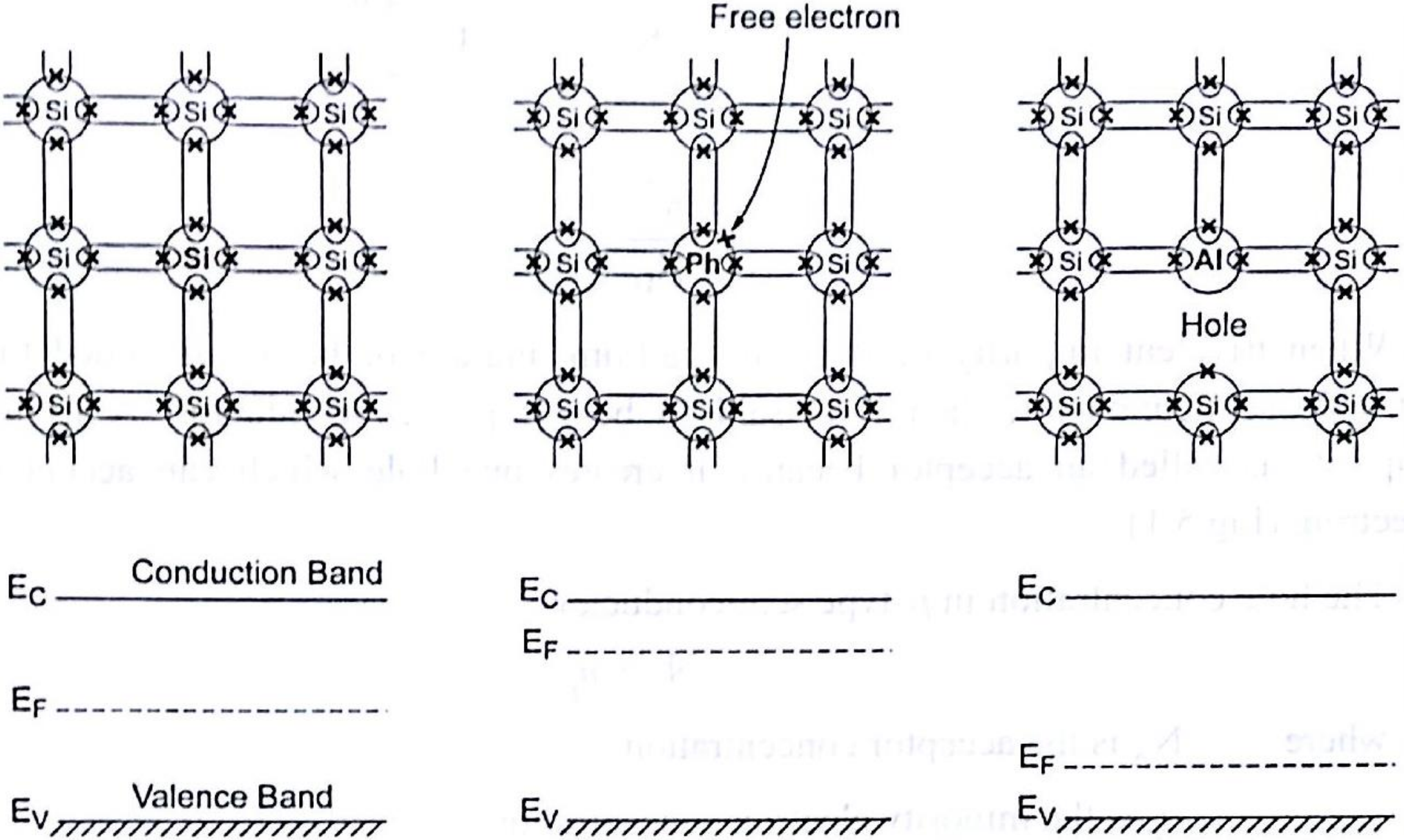

(a) Intrinsic *(b) n type* *(c) p type*

The electron concentration in n type semiconductor

$$n_n = N_D + p_n$$

where N_D is the donor concentration

p_n is the minority hole concentration

$$\therefore \quad n_n = \frac{N_D + \sqrt{N_D^2 + 4\,n_i^2}}{2}$$

$$p_n = \frac{-N_D + \sqrt{N_D^2 + 4\,n_i^2}}{2}$$

If $N_D >> n_i$, $\quad \therefore \; n_n = N_D$

$$p_n = \frac{-N_D + \left[N_D \left(1 + \frac{4\,n_i^2}{N_D} \right) \right]^{\frac{1}{2}}}{2}$$

$$\therefore \quad p_n \approx \frac{-N_D + N_D\left(1 + \frac{4\,n_i^2}{2\,N_D}\right)}{2}$$

$$\approx \frac{n_i^2}{N_D}$$

The hole concentration in p-type semiconductor

$$p_p = N_A + n_p$$

where N_A is the acceptor concentration

n_p is the minority electron concentration

$$p_p = \frac{N_A + \sqrt{N_A^2 + 4\,n_i^2}}{2}$$

$$n_p = \frac{-N_A + \sqrt{N_A^2 + 4\,n_i^2}}{2}$$

If $N_A >> n_i$, $\quad \therefore \quad p_p \approx N_A$

$$n_p = \frac{-N_A + \left[N_A\left(1 + \frac{4\,n_i^2}{N_A}\right)\right]^{\frac{1}{2}}}{2}$$

$$\approx \frac{n_i^2}{N_A}$$

Bipolar junction transistors

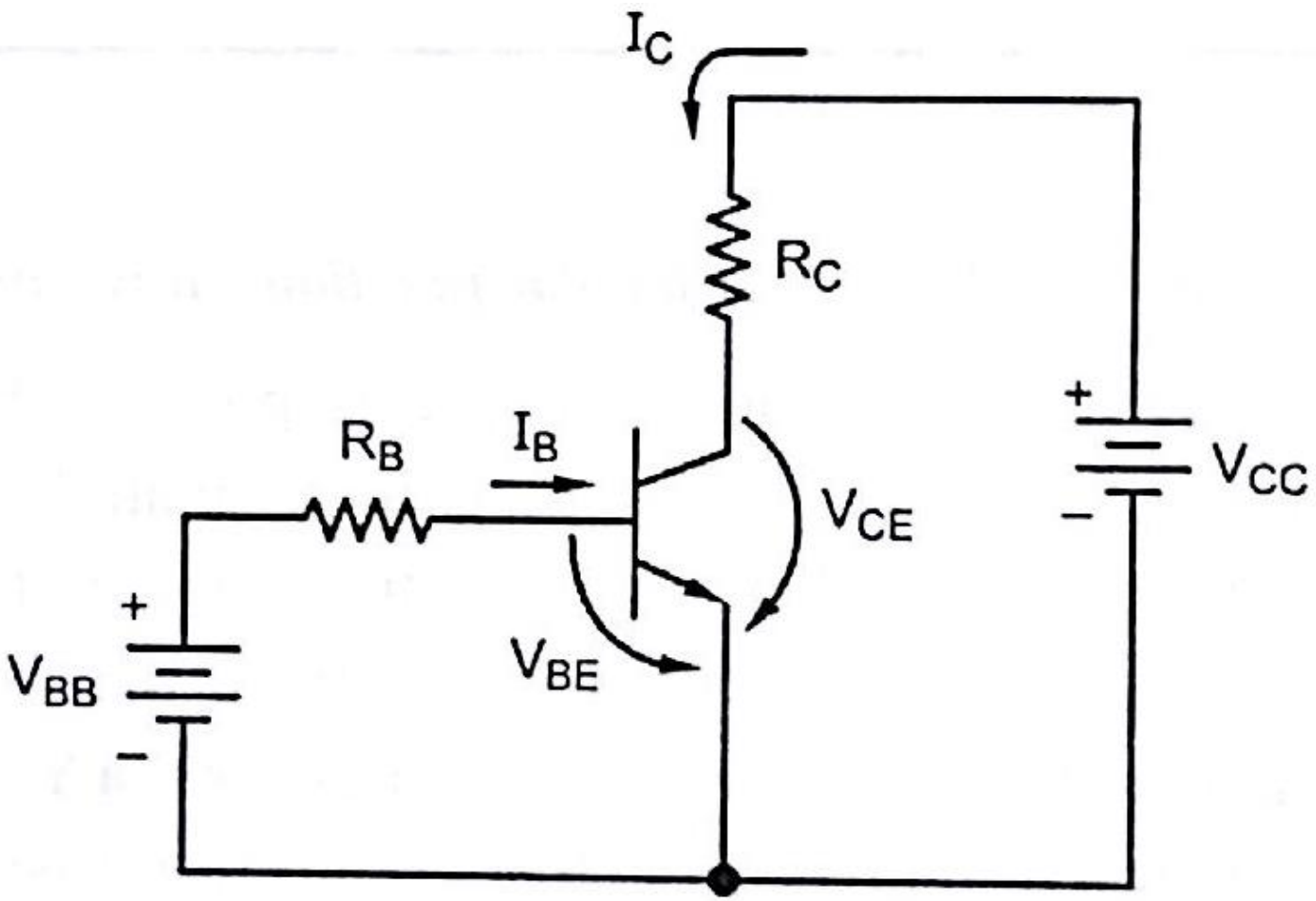

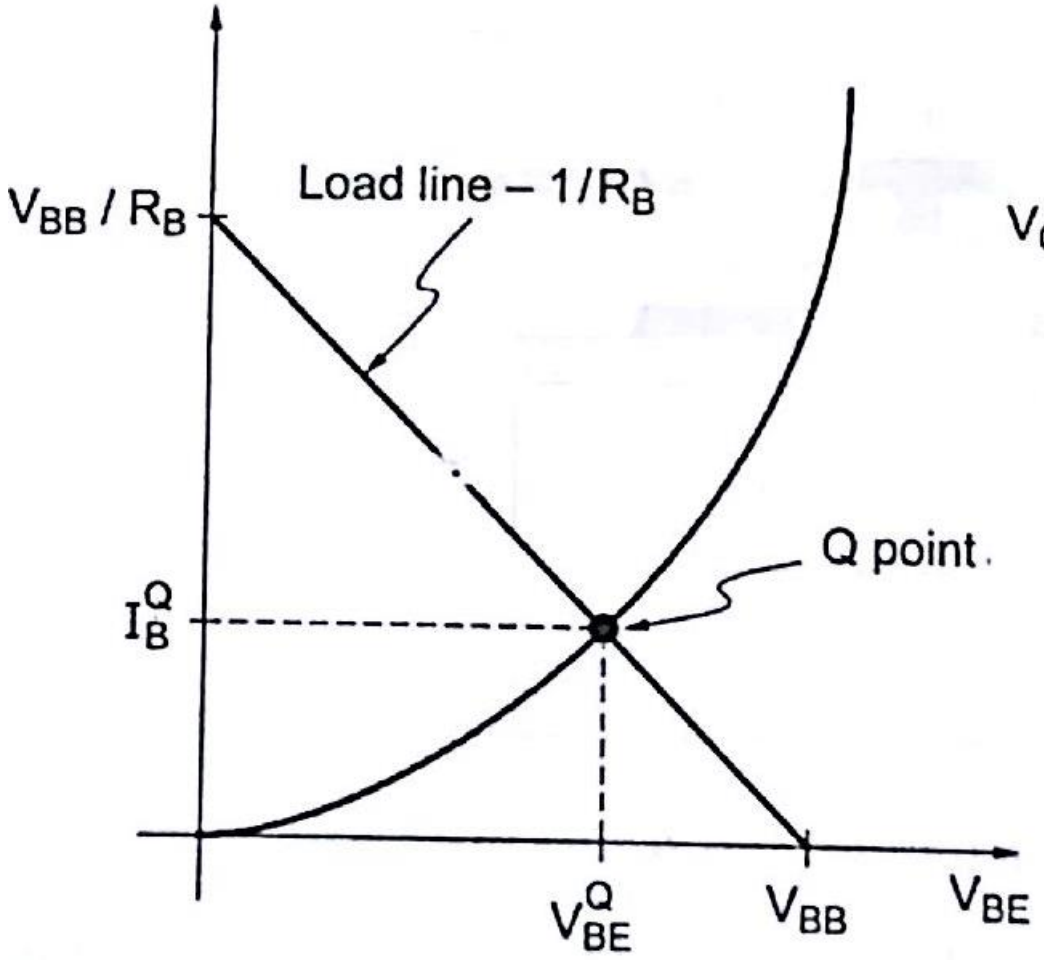

(b) Input characteristic of transistor

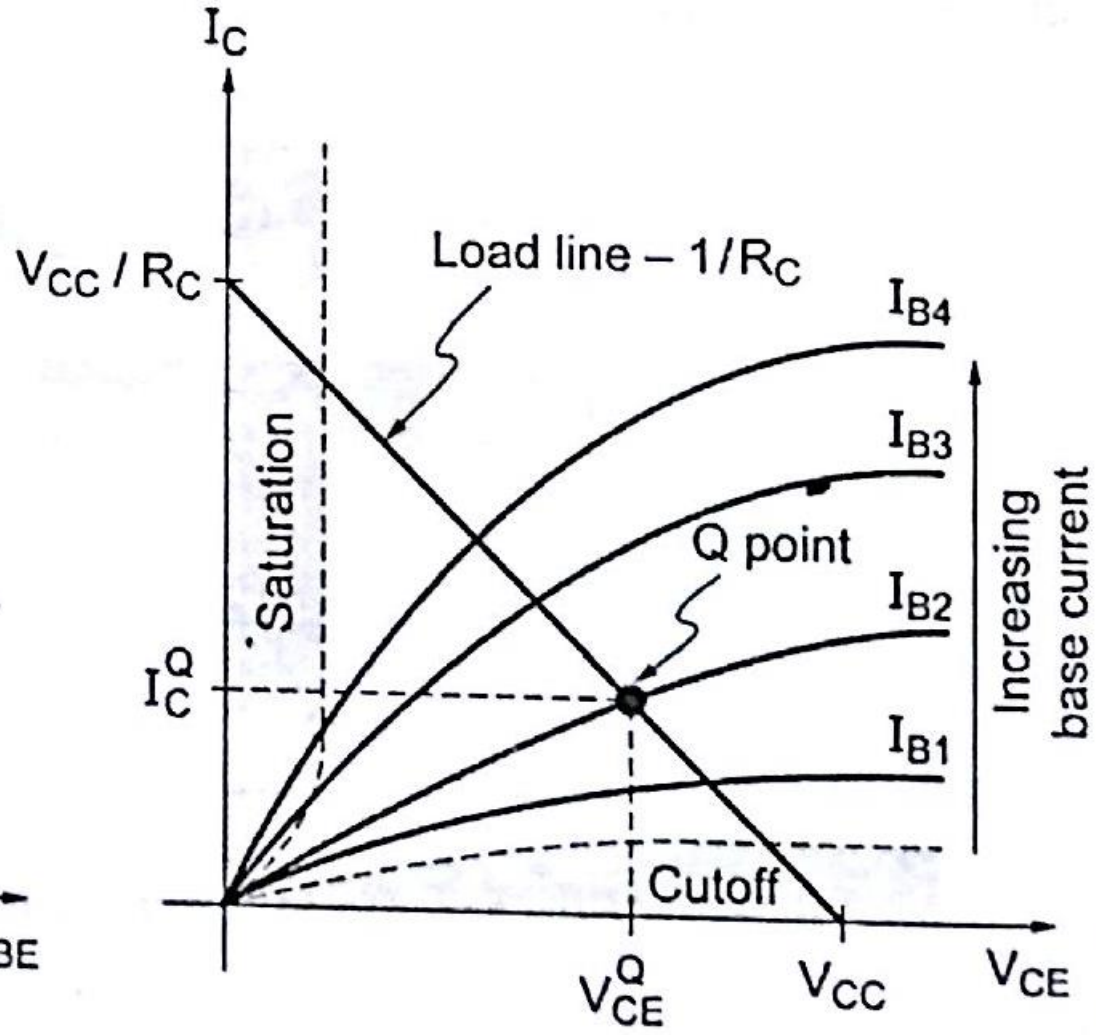

(c) Output characteristic of transistor

Forward Active Mode

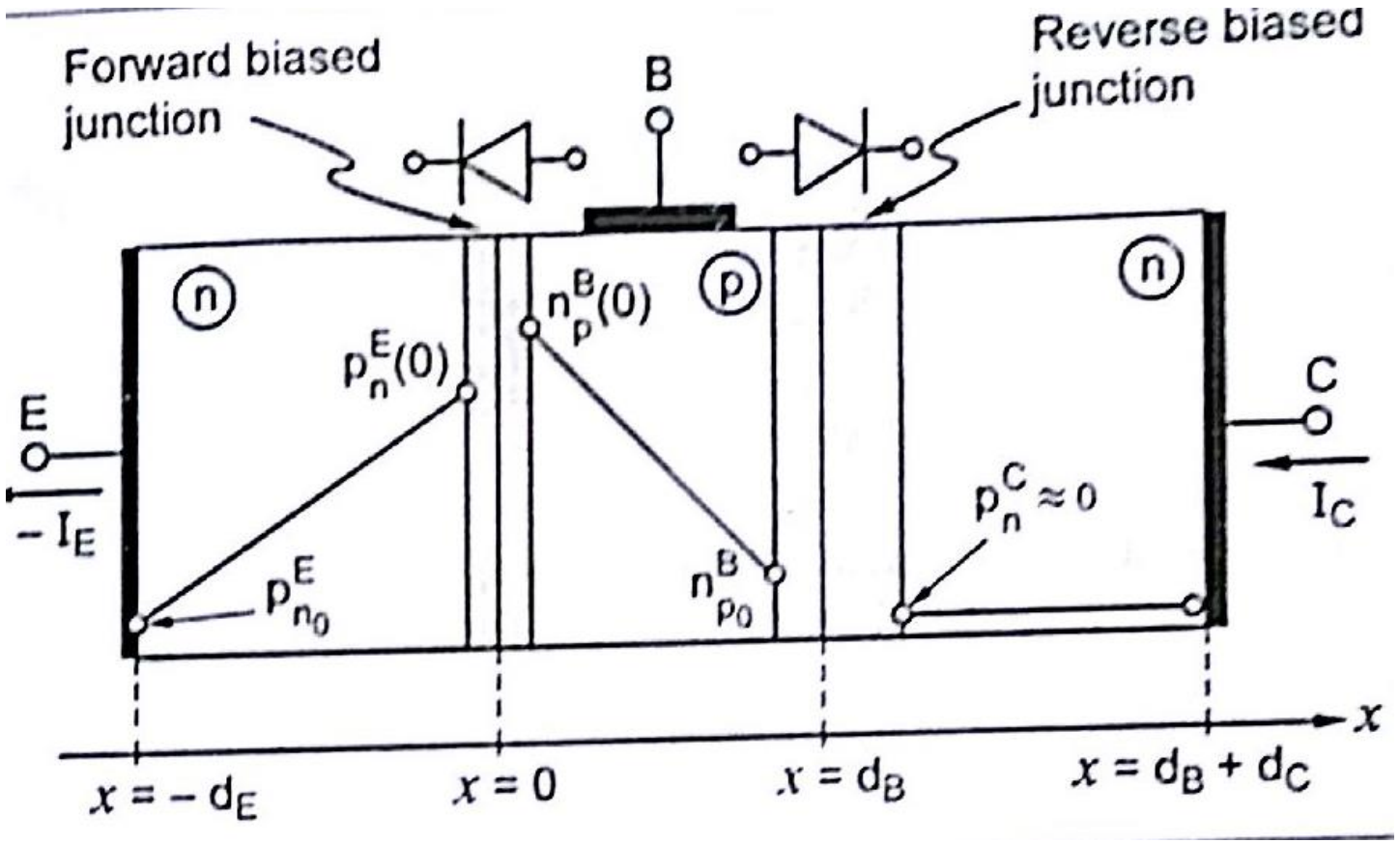

The diffusion current due to holes in emitter is

$$J^{E}_{p\,\text{diff}} = -q\,D^{E}_{p}\left[\frac{dp^{E}_{n}(x)}{dx}\right]$$

$$= \frac{-q\,D^{E}_{p}}{d_{E}}\left[p^{E}_{n}(0) - p^{E}_{n}(-d_{E})\right]$$

Substituting the values of p^{E}_{n}

$$J^{E}_{p\,\text{diff}} = \frac{-q\,D^{E}_{p}}{d_{E}}\left(p^{E}_{n_0}\,e^{V_{BE}/V_T} - p^{E}_{n_0}\right)$$

$$\therefore\ J^{C}_{p\,\text{diff}} = \frac{q\,D^{E}_{p}\,p^{E}_{n_0}}{d_{E}}\left(e^{V_{BE}/V_T} - 1\right)$$

The diffusion current due to electrons in base is

$$J^{B}_{n\,\text{diff}} = q\,D^{B}_{p}\left[\frac{dn^{B}_{p}(x)}{dx}\right]$$

$$= \frac{q\,D^{B}_{n}}{d_{B}}\left[n^{B}_{p}(d_{B}) - n^{B}_{p}(0)\right]$$

The forward base current is

$$I_{FB} = -J^{E}_{p\,diff}\,A = \frac{q\,D^{E}_{p}\,p^{E}_{n_0}}{d_E}\,A\,(e^{V_{BE}/V_T} - 1)$$

The forward emitter current I_{FE} is the sum of collector current and base current.

Forward current gain β_F is

$$\beta_F = \left.\frac{I_{FC}}{I_{FB}}\right|_{V_{CE}}$$

$$= \frac{D^{B}_{n}\,n^{B}_{p_0}\,d_E}{D^{E}_{p}\,p^{E}_{n_0}\,d_B} = \frac{I_S\,d_E}{q\,D^{E}_{p}\,p^{E}_{n_0}} \qquad [\because e^{V_{BE}/V_T} >> 1]$$

Collector current to emitter current ratio α_F is given by

$$\alpha_F = \left.\frac{I_{FC}}{-I_{FE}}\right|_{V_{CE}} = \frac{\beta_F}{1+\beta_F}$$

Reverse Active Mode

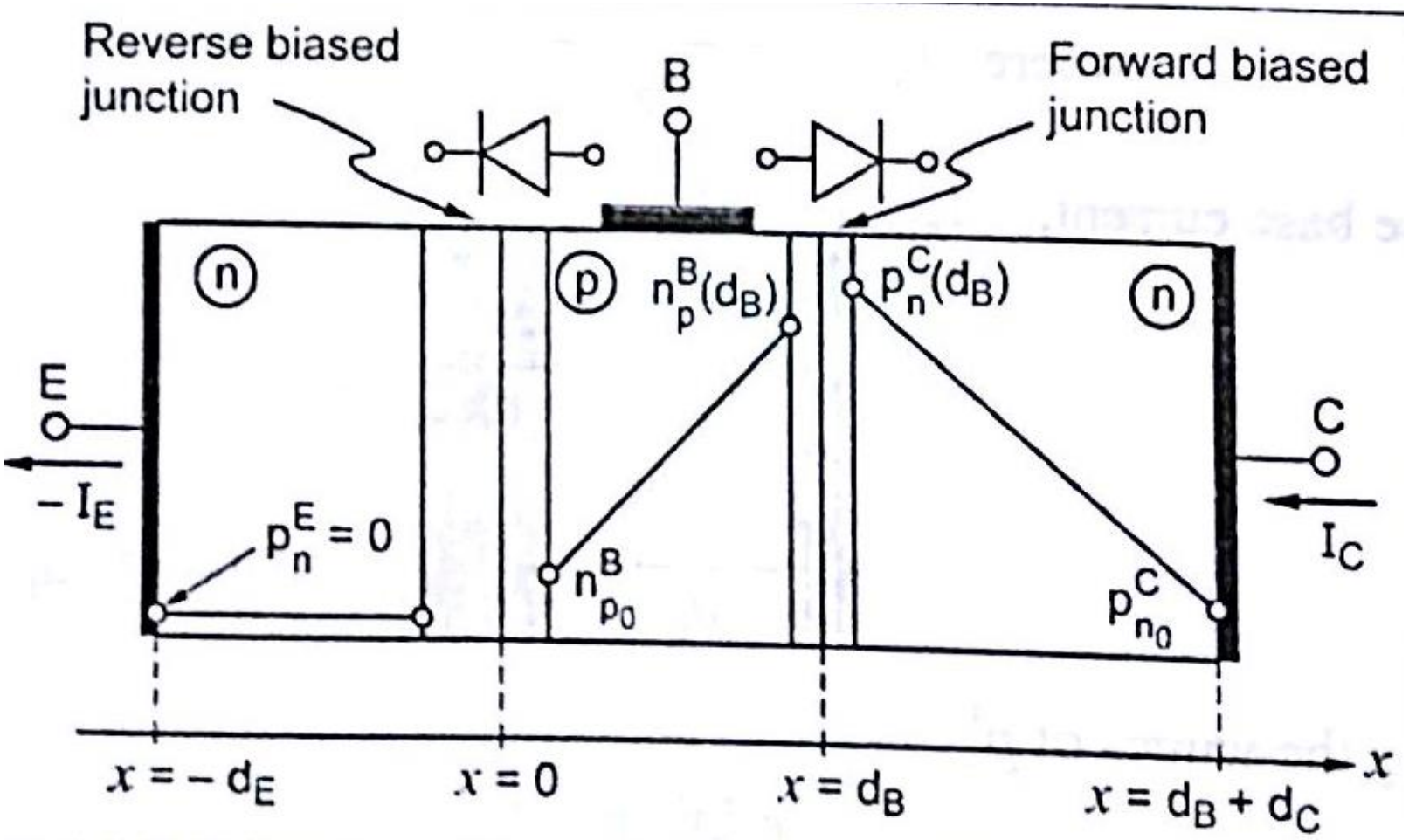

Since emitter-base is reverse biased, minority charge concentrations (p_n^E) are zero.

The minority charge concentrations in base at distance $x = 0$ and $x = d_B$.

$$n_p^B(0)\ n_{p_0}^B\ e^{V_{BE}/V_T} = 0$$

$$n_p^B(d_B) = n_{p_0}^B\ e^{V_{BC}/V_T}$$

The minority charge concentrations in collector at distance $x = d_B$ and $x = d_B + d_C$

$$p_n^C(d_B) = p_{n_0}^C\ e^{V_{BC}/V_T}$$

$$p_n^C(d_B + d_C) = p_{n_0}^C$$

The reverse emitter current I_{RE} is given by

$$I_{RE} = -J_{n\,\text{diff}}^B\ A$$

$$= -q\ D_n^B \left(\frac{dn_p^B}{dx}\right) A$$

$$= \frac{-q\ D_n^B}{d_B}\left[n_p^B(0) - n_p^B(d_B)\right]$$

Reverse current gain β_R is given by

$$\beta_R = \left.\frac{I_{RE}}{I_{RB}}\right|_{V_{BC}}$$

$$= \frac{D_n^B \; n_{p_0}^B \; d_C}{D_p^C \; p_{n_0}^C \; d_B}$$

$$= \frac{I_S \, d_C}{D_p^C \; p_{n_0}^C} \qquad [\because e^{V_C/V_T} >> 1]$$

Reverse collector current to reverse emitter current ratio α_R is given by

$$\alpha_R = \left.\left(\frac{I_{RC}}{-I_{RE}}\right)\right|_{V_{BC}}$$

$$= \frac{\beta_R}{1+\beta_R}$$

Saturation Mode

For saturation mode, both the junctions are forward biased. The diffusion current density in the base is the algebraic sum of forward collector current and reverse emitter current

$$J^{B}_{n\,diff} = -J_{FC} + J_{RE}$$

$$I_{RE} - I_{FC} = -I_S\, e^{V_{BE}/V_T} + I_S\, e^{V_{BC}/V_T}$$

The emitter current is given by

$$I_E = I_{RE} - I_{FC} - I_{FB}$$

$$= -I_S\, e^{V_{BE}/V_T} + I_S\, e^{V_{BC}/V_T} - \frac{I_S}{\beta_F}(e^{V_{BE}/V_T} - 1)$$

Add and subtract I_S,

$$I_E = -I_S\, e^{V_{BE}/V_T} + I_S + I_S\, e^{V_{BC}/V_T} - I_S - \frac{I_S}{\beta_F}(e^{V_{BE}/V_T} - 1)$$

$$= -I_S\,(e^{V_{BE}/V_T} - 1) - \frac{I_S}{\beta_F}(e^{V_{BE}/V_T} - 1) + I_S\,(e^{V_{BC}/V_T} - 1)$$

The collector current I_C is

$$I_C = I_{FC} - I_{RE} + I_{RB}$$

$$= I_S e^{V_{BE}/V_T} - I_S e^{V_{BC}/V_T} - \frac{I_S}{\beta_R}(e^{V_{BC}/V_T} - 1)$$

Add and subtract I_S,

$$I_C = I_S e^{V_{BE}/V_T} - I_S e^{V_{BC}/V_T} + I_S - \frac{I_S}{\beta_R}(e^{V_{BC}/V_T} - 1)$$

$$= I_S (e^{V_{BE}/V_T} - 1) - \frac{I_S}{\beta_R}(e^{V_{BC}/V_T} - 1) - I_S (e^{V_{BC}/V_T} - 1)$$

Base current I_B is given by

$$I_B = -I_C - I_E$$

$$= I_S \left[\frac{1}{\beta_R}(e^{V_{BC}/V_T} - 1) + \frac{1}{\beta_F}(e^{V_{BE}/V_T} - 1) \right]$$

RF FIELD EFFECT TRANSISTORS

(i) ***Metal Insulator Semiconductor FET (MISFET):*** Gate is connected to the channel through the insulation layer. (Metal oxide semiconductor FET (MOSFET) belongs to this type (Fig.5.11(a)).

(ii) ***Junction FET (JFET):*** The reverse biased *pn* junction isolates the gate from the channel. (Fig.5.11(b)).

(iii) ***Metal Semiconductor FET (MESFET):*** The reverse biased *pn* junction is replaced by a Schottky contact as in JFET (Fig.5.11(c)).

(iv) ***Hetero FET:*** The hetero structures utilise abrupt transitions between layers of different semiconductor materials (GaAlAs to GaAs). High Electron Mobility Transistor (HEMT) belongs to this type.

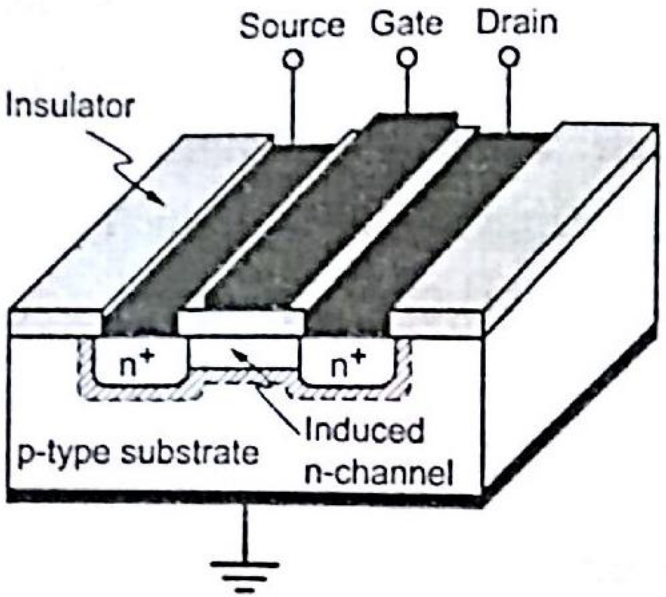

(a) Metal insulator semiconductor FET (MISFET)

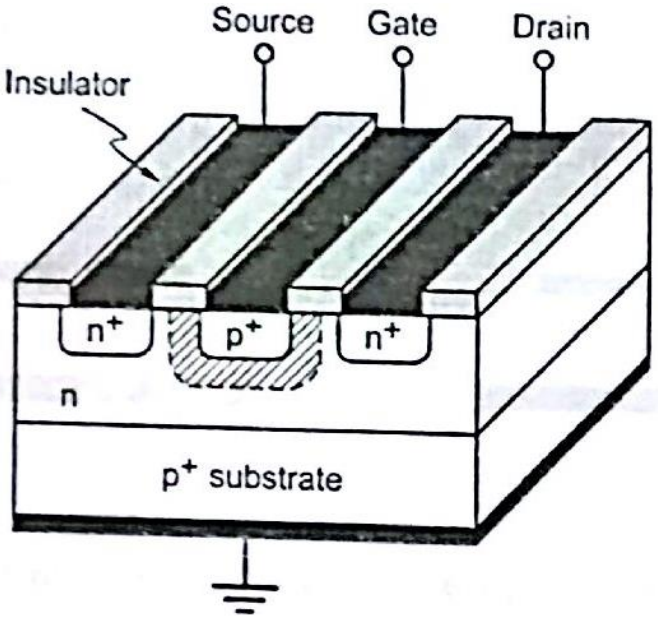

(b) Junction field effect transistor (JFET)

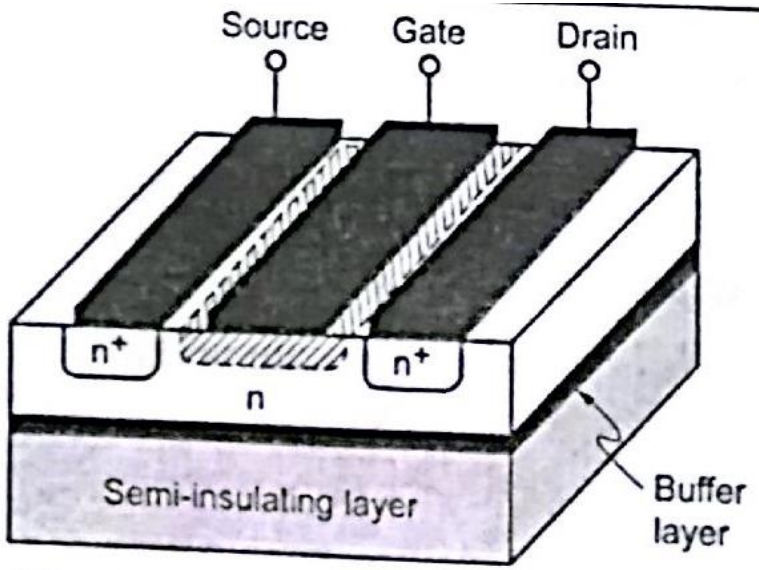

(c) Metal semiconductor FET (MESFET)

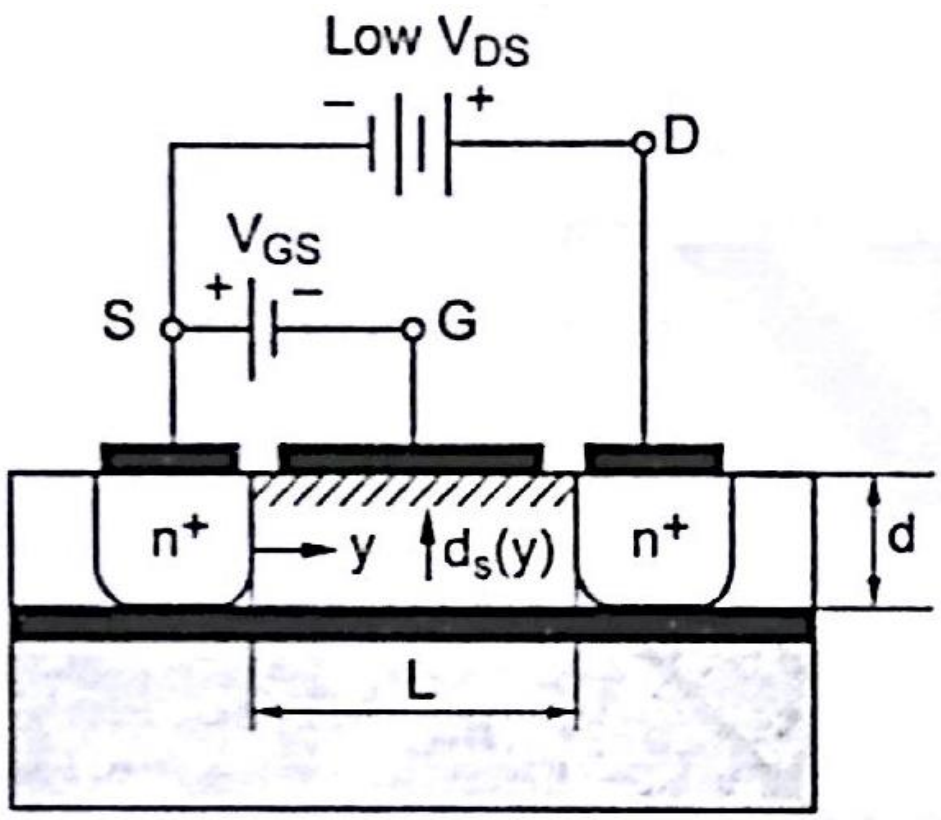

(a) Operation in the linear region

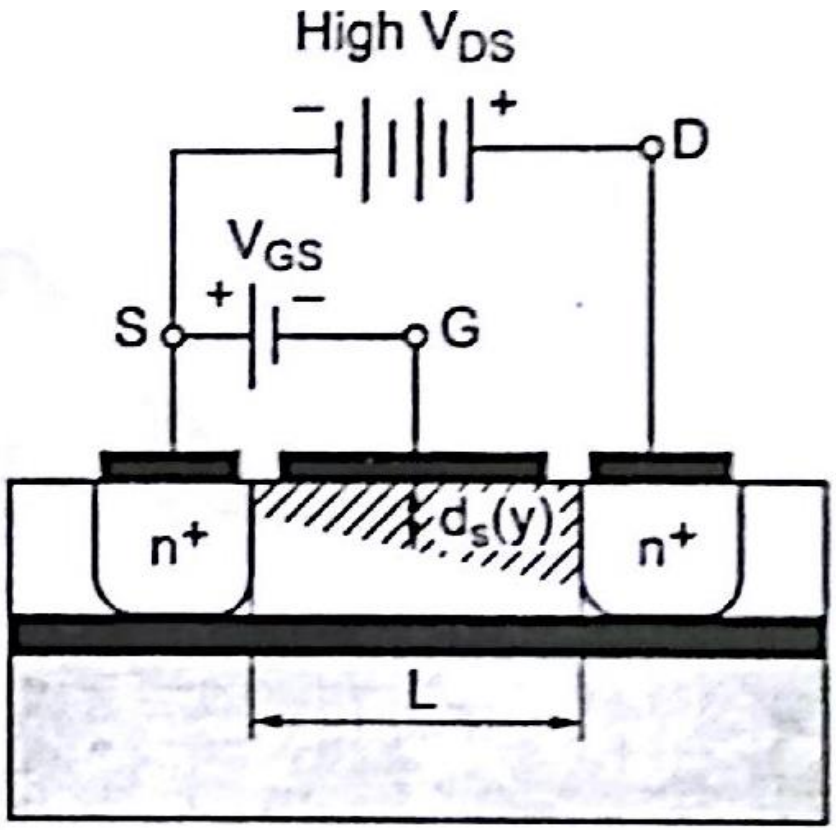

(b) Operation in the saturation region

The resistance (R) between source and drain is

$$R = \frac{L}{\sigma (d - d_S) N}$$

where Conductivity, $\sigma = q \mu_n N_D$

W is the gate width.

The drain current is

$$I_D = \frac{V_{DS}}{R}$$

$$= G_0 \left[1 - \frac{2 \varepsilon_0 \varepsilon_r}{q d^2} \left(\frac{V_d - V_{GS}}{N_D} \right) \right] V_{DS}$$

where Conductance, $G_0 = \frac{\sigma W_d}{L}$

The drain saturation voltage is

$$V_{D\,sat} = \frac{q N_D d^2}{2 \varepsilon} - (V_d - V_{GS})$$

$$= V_p - V_d + V_{GS}$$

$$= V_{GS} - V_{T0}$$

where Pinch-off voltage, $V_p = \dfrac{q\, N_D\, d^2}{2\, \varepsilon_0\, \varepsilon_r}$

Threshold voltage, $V_{T0} = V_d - V_p$

The drain saturation current is

$$I_{D\,sat} = G_0\left[\frac{V_p}{3} - (V_d - V_{GS}) + \frac{2}{3\sqrt{V_p}}(V_D - V_{GS})^{\frac{3}{2}}\right]$$

$$= I_{DSS}\left(1 - \frac{V_{GS}}{V_{T0}}\right)^2$$

where I_{DSS} is maximum saturation drain current

$$I_{DSS} = G_0\left[\frac{V_p}{3} - V_d + \frac{2}{3\sqrt{V_p}}(V_d)^{3/2}\right]$$

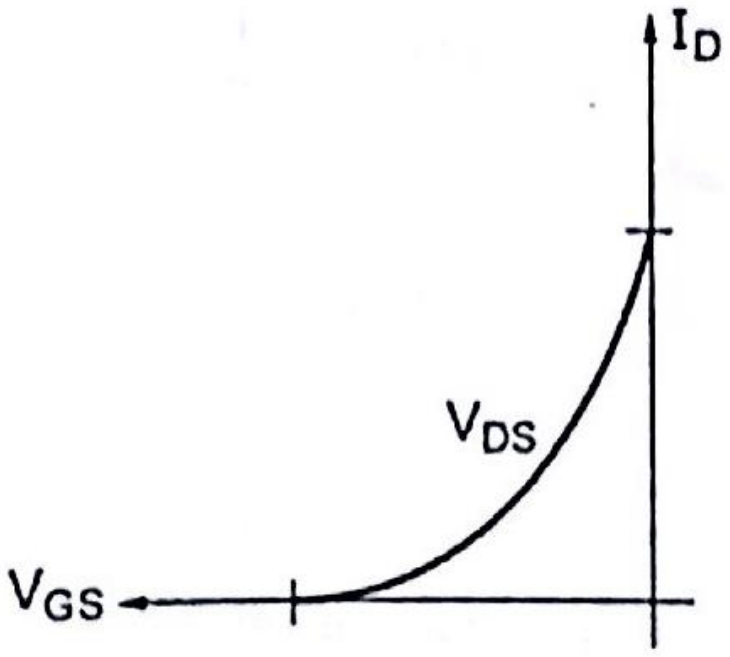

(a) Transfer characteristic

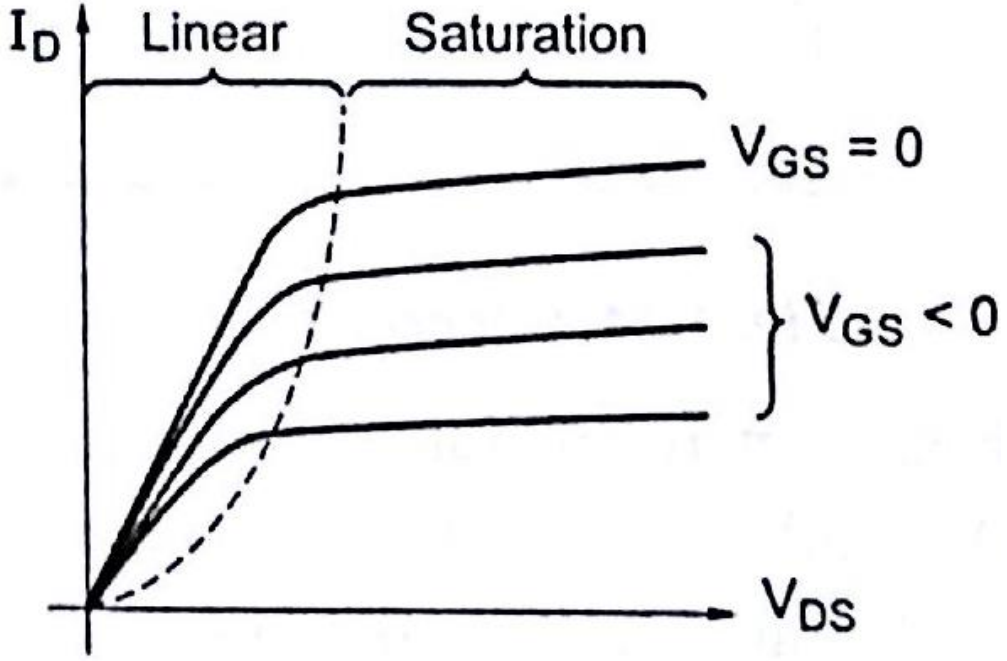

(b) Output characteristic

HIGH ELECTRON MOBILITY TRANSISTOR

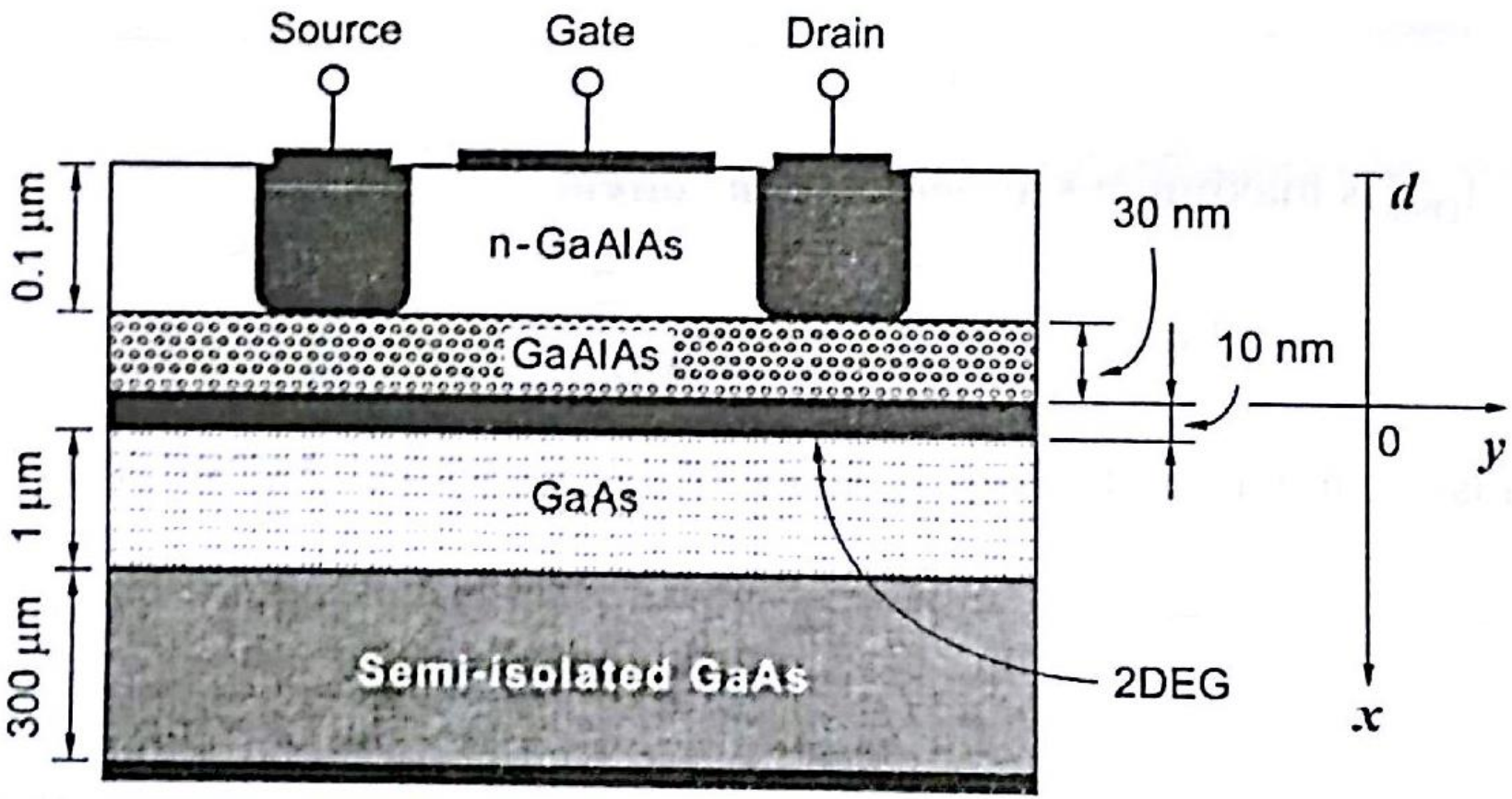

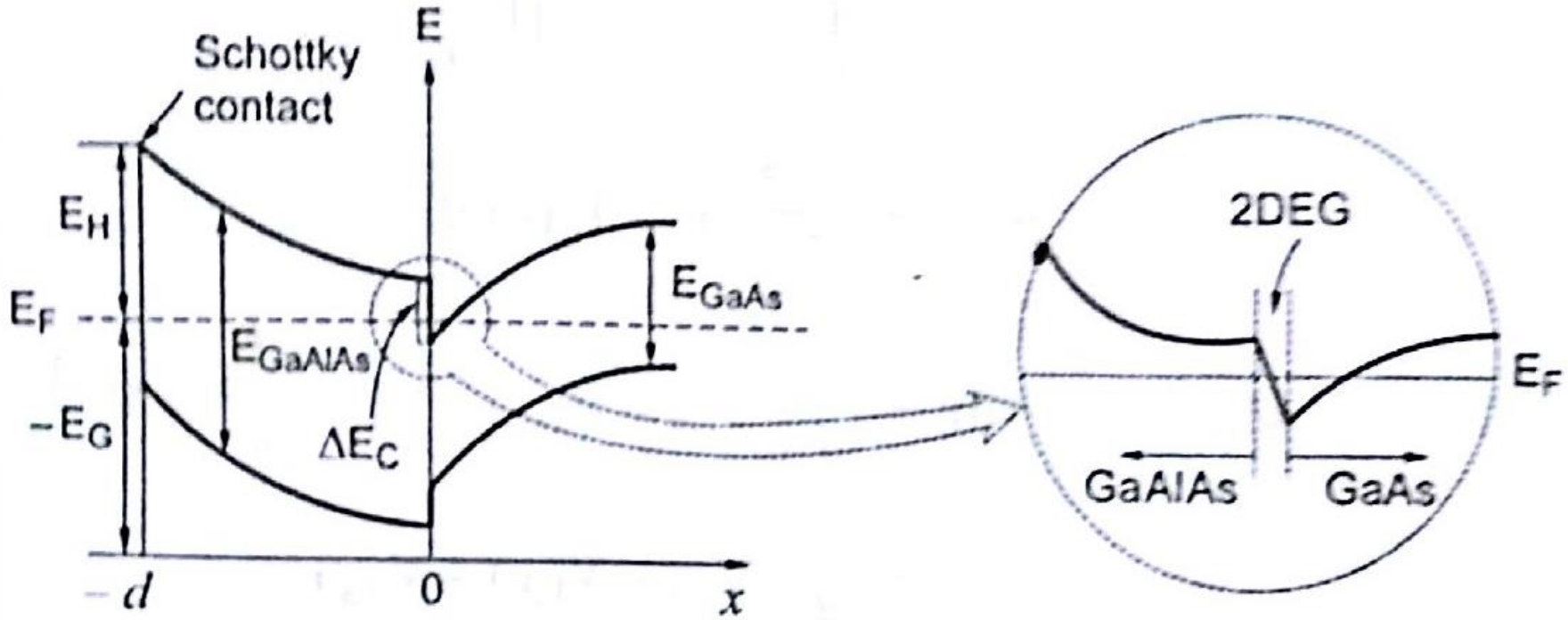

(a) Energy band diagram *(b) Close-up view of conduction band*

To determine the potential distribution along the x-axis, Poisson's equation is used.

$$\frac{d^2V(x)}{dx^2} = -\frac{\rho(x)}{\varepsilon_0 \varepsilon_r}$$

$$\rho(x) = q\,N_D$$

$$\frac{d^2V(x)}{dx^2} = -\frac{qN_D}{\varepsilon_H}$$

where N_D is the donor concentration in GaAlAs hetero structure

ε_H is the dielectric constant in GaAlAs hetero structure

By applying boundary conditions at metal-semiconductor side

$$V(x = -d) = -V_b + V_G + \frac{\Delta E_C}{q}$$

where V_b is the barrier voltage

$$V_G = -V_{GS} + V(y)$$

$$\text{and} \quad V(x=0) = 0$$

Potential at metal-semiconductor

$$V(-d) = \iint d^2V = -\iint \frac{q\,N_D}{\varepsilon_H}\,dx^2$$

$$= \frac{q\,N_D}{2\,\varepsilon_H}x^2 - E_y(0)\,d$$

$$\text{where,} \quad E_y(0) = \frac{1}{d}\left(V_{GS} - V(y) - V_b + \frac{\Delta E_C}{q} + V_p\right)$$

$$= \frac{1}{d}\left(V_{GS} - V(y) - V_{To}\right)$$

$$\text{where,} \quad \text{Threshold voltage, } V_{To} = V_b - \frac{\Delta E_C}{q} - V_p$$

$$\text{Pinch-off voltage, } V_p = \frac{q\,N_D\,d^2}{2\,\varepsilon_H}$$

The electron drain current is given by

$$I_D = \sigma E_y A$$

$$\text{But } \sigma = q \mu_n N_D \text{ and } A = wd$$

$$I_D = q \mu_n N_D E_y wd$$

$$I_D = q \mu_n N_D \left(\frac{dV}{dy}\right) wd \qquad \left[\because E_y = \frac{dV}{dy}\right]$$

$$\text{But } \sigma = \frac{-\mu_n Q}{w L d} = \frac{-\mu_n Q_s}{d}$$

$$\left[\because \text{Surface charger density } Q_s = \frac{Q}{wL}\right]$$

where L is the channel length

$$I_D = \sigma E_y A = \frac{\mu_n Q_S}{d} E \cdot w d$$

$$= \mu_n Q_S w E = \mu_n Q_S w \frac{dV}{dy}$$

Bipolar LNA

The simple common emitter LNA is shown in Fig.5.16(a). The transistor Q_2 and current I_2 are used to bias the transistor Q_1. Resistor R_1 isolates the signal path from the noise of Q_2. If $R_1 >> R_S$, the effect of bias circuit upon the LNA's performance can be neglected.

The input referred noise voltage per unit bandwidth is given by

$$\overline{V}_n^2 = 4\,kT\left(r_b + \frac{1}{2\,g_m}\right) = 4\,kT\left(r_b + \frac{V_T}{2\,I_C}\right)$$

$$R_{eq} = r_b + \frac{V_T}{2\,I_C}$$

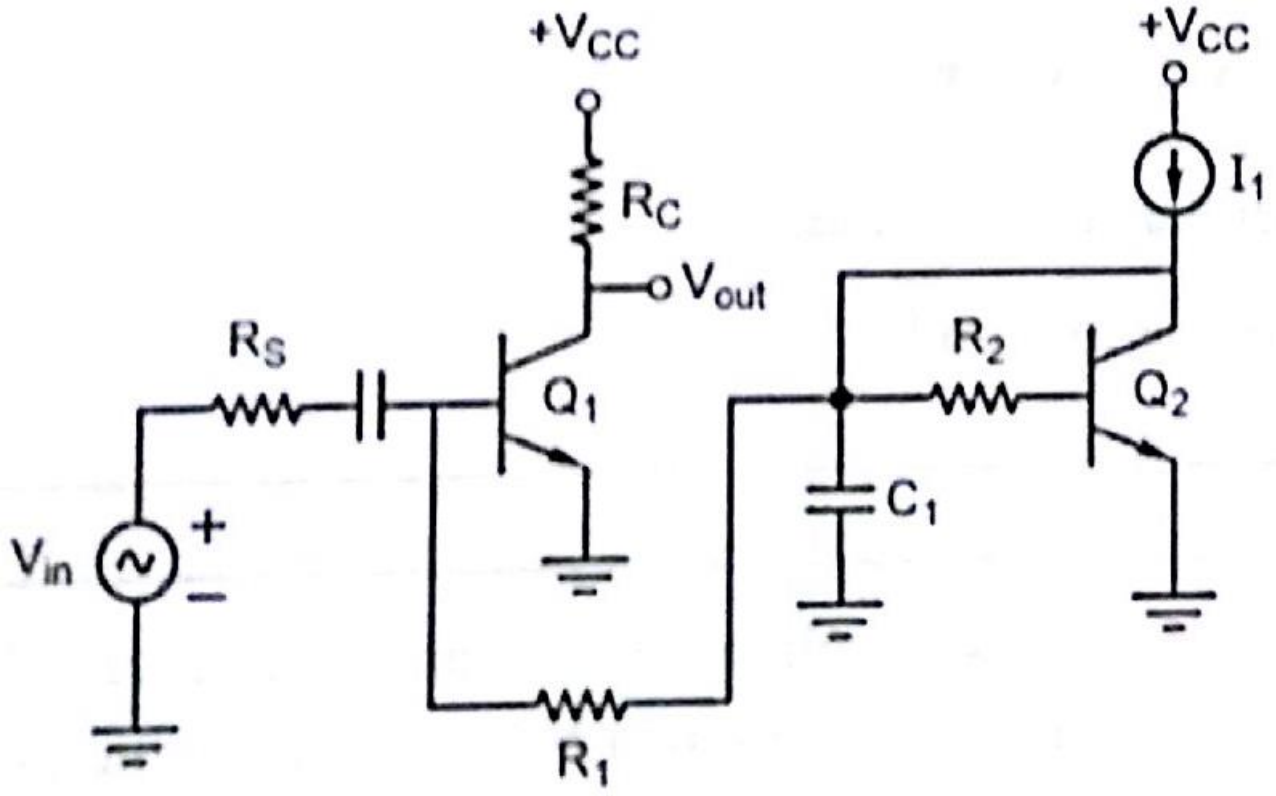

(a) Simple bipolar LNA

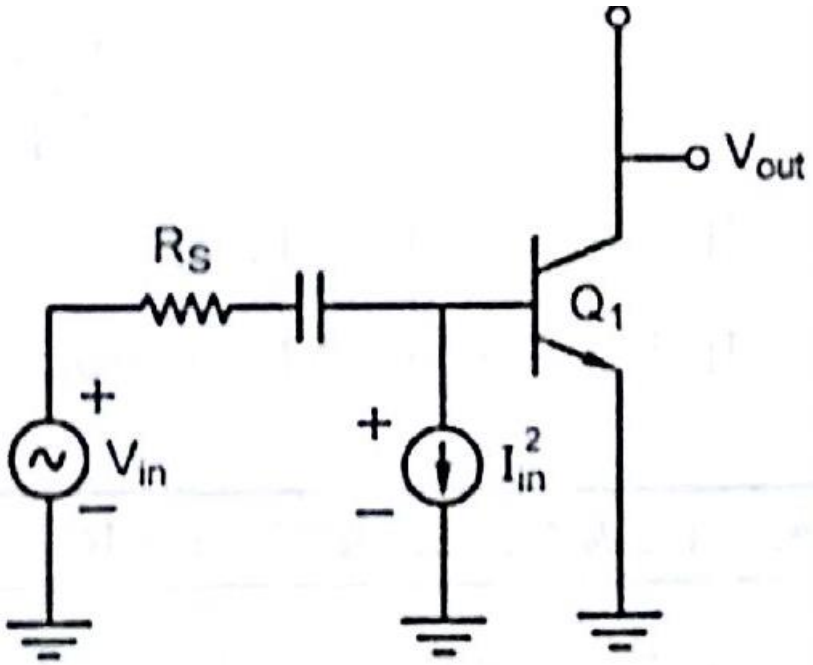

(b) LNA with base shot noise

The total input referred noise voltage including the source resistance R_S is

$$\overline{V_{tot}^2} = 4kT\left(R_S + r_b + \frac{1}{2g_m} + \frac{g_m R_S^2}{2\beta}\right)$$

$$\therefore \text{ The noise figure, } NF = \frac{\overline{V_{tot}^2}}{4kT R_S} = 1 + \frac{r_b}{R_S} + \frac{1}{2g_m R_S} + \frac{g_m}{2\beta}$$

Two Stage LNA

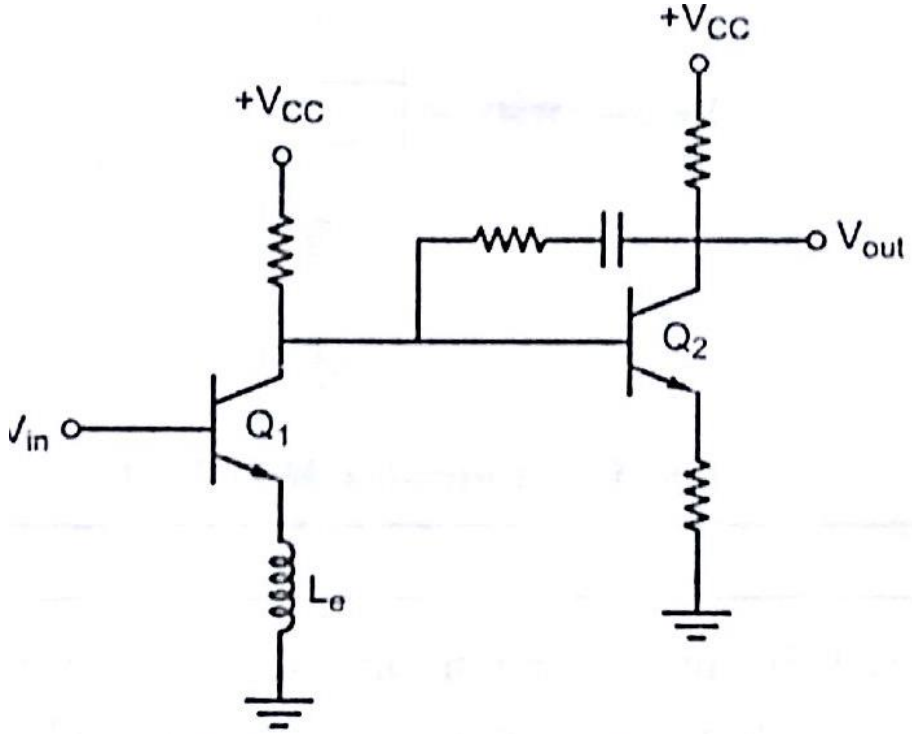

Cascode CMOS LNA

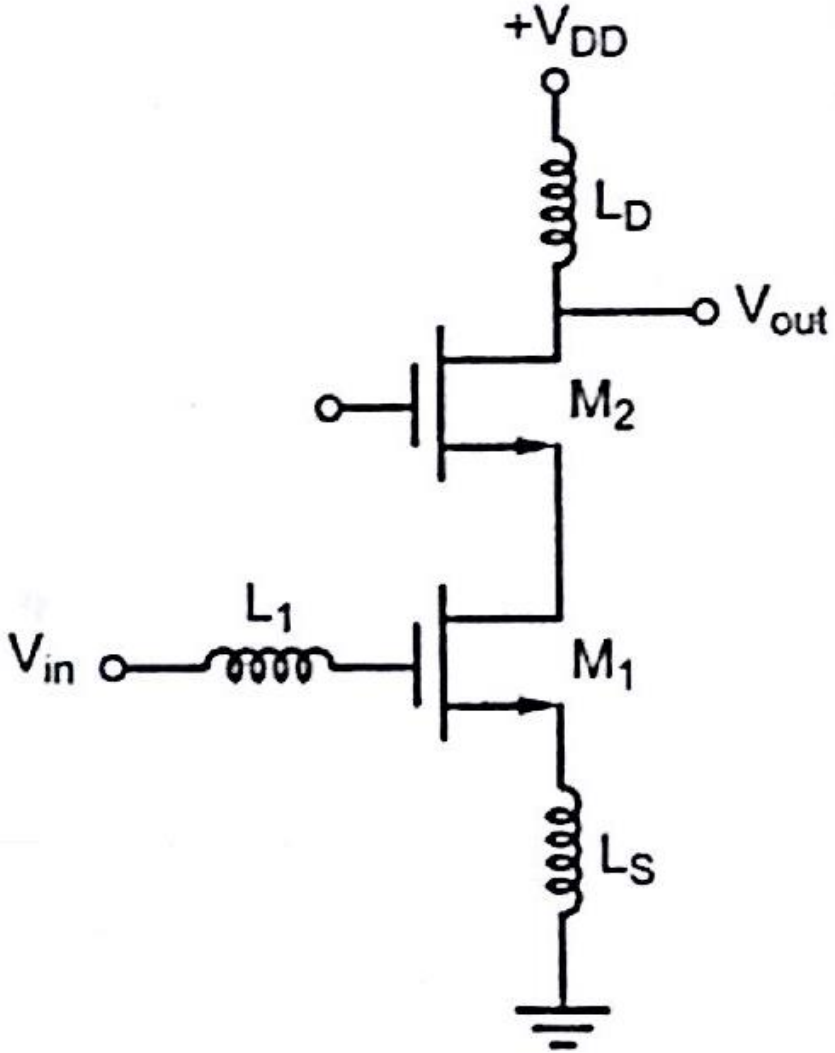

MIXERS

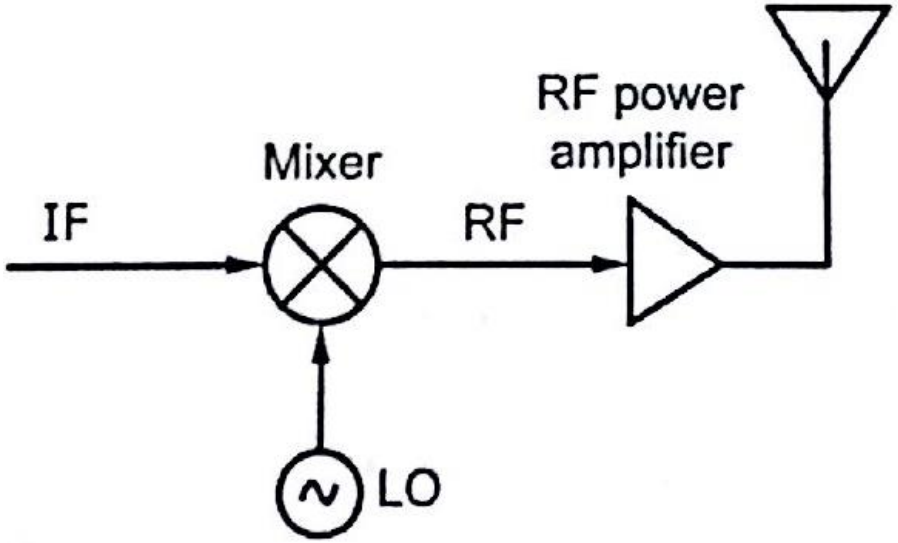

(a) Upconversion

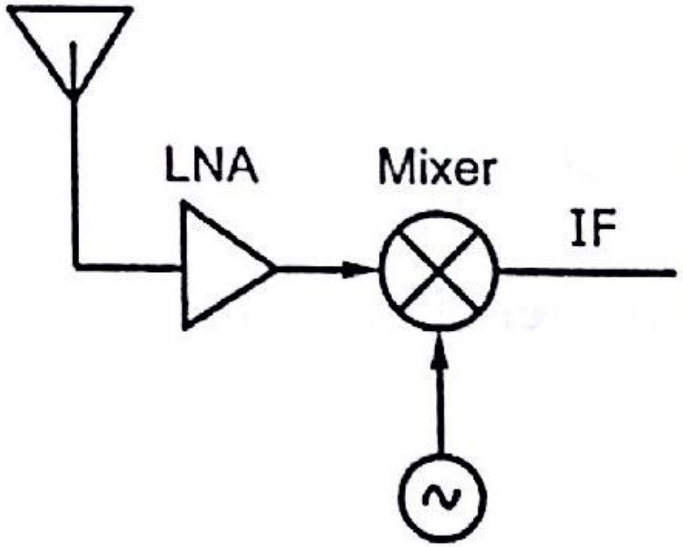

(b) Down conversion

Signal Ended Mixer Design

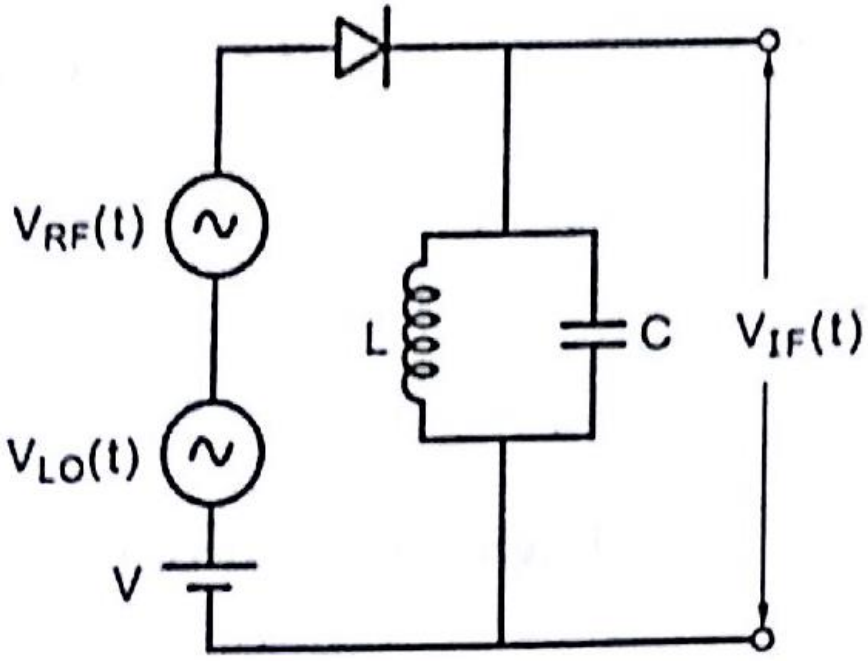

(a) Diode Mixer

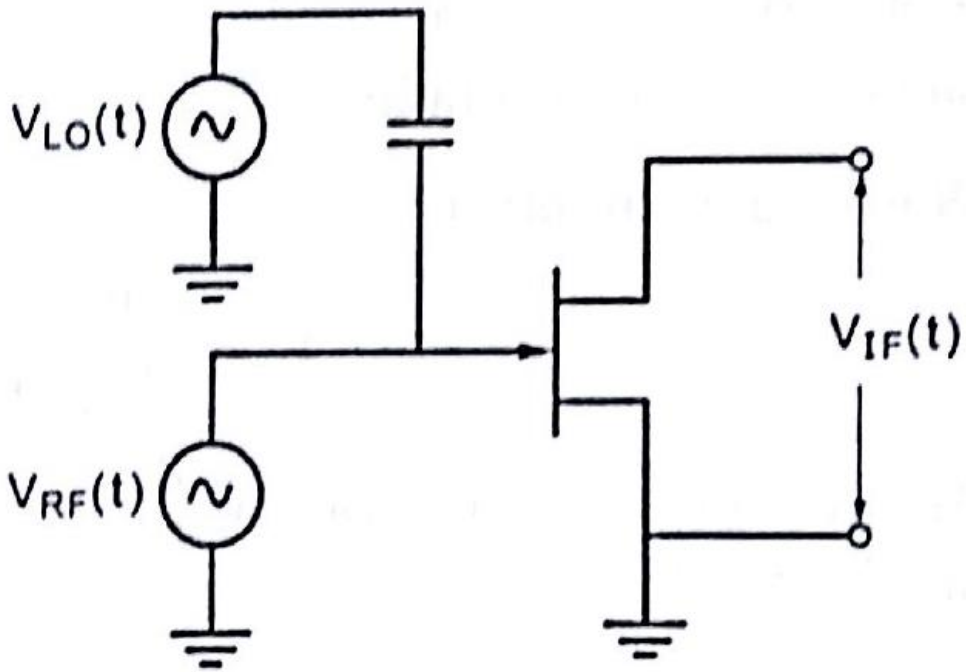

(b) FET Mixer

Double Balanced Mixer

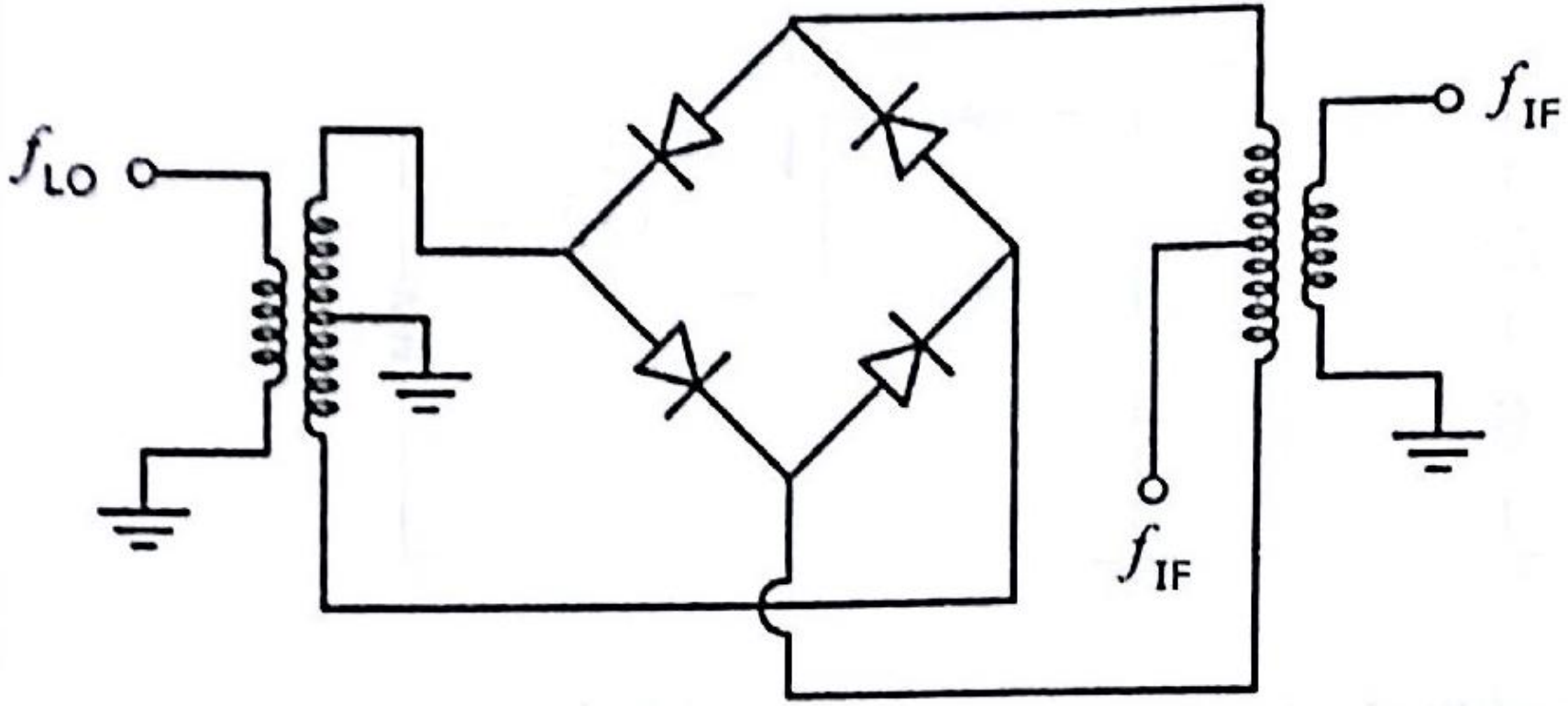

VOLTAGE CONTROLLED OSCILLATOR

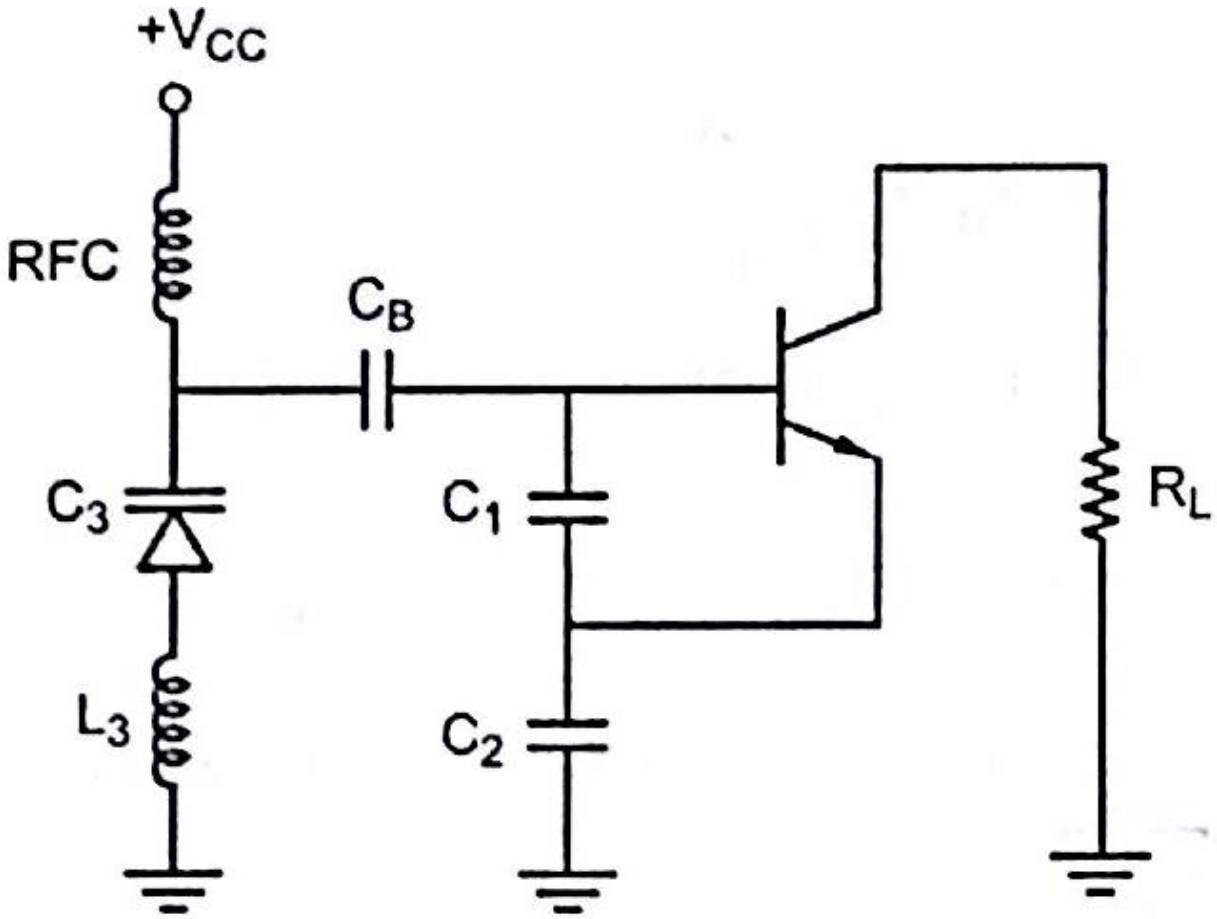

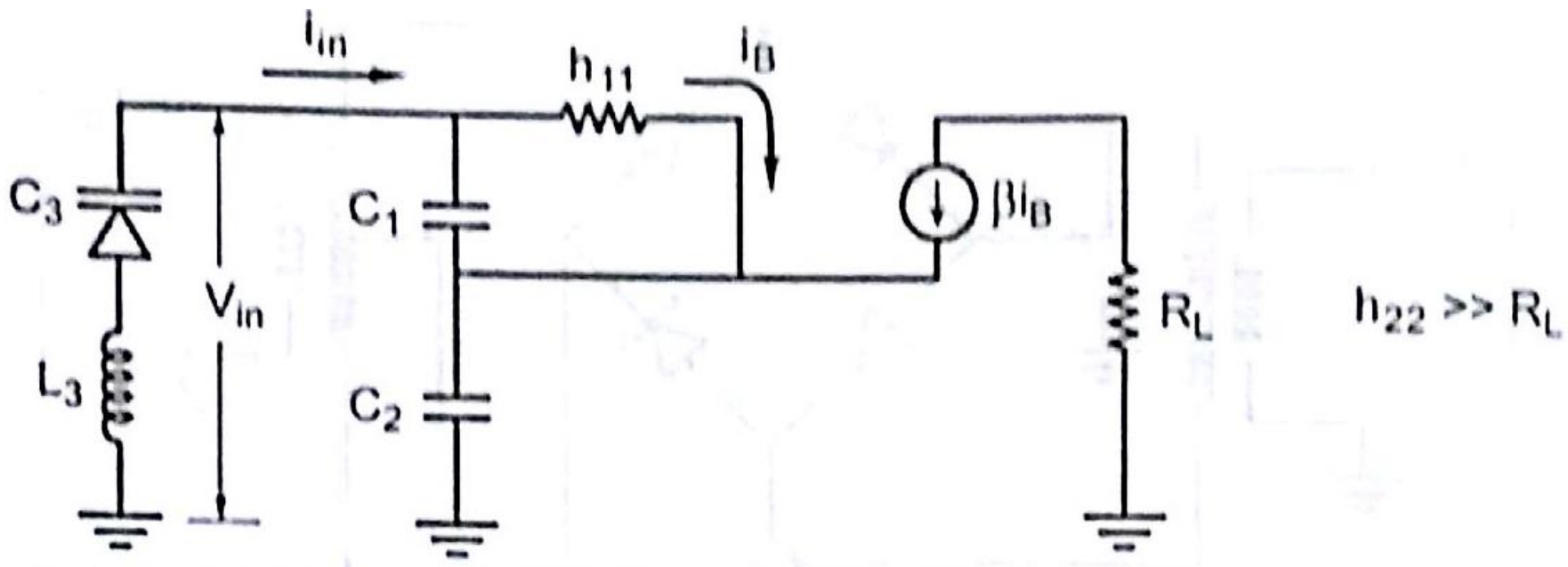

Equivalent circuit of VCO using varactor diode

Power Amplifiers - Introduction

RF amplifier designs are differ significantly from low-frequency circuit approaches and require special considerations.

Most of the amplifiers can oscillate when terminated with certain source and load impedances.

Matching networks can help stabilize the amplifier by keeping the source and load impedances in the appropriate range.

In the amplifier design process, stability analysis is a first step.

Gain and noise figure circles are the basic requirements needed to develop an amplifier circuits to meet the requirements of gain, gain flatness, output power, bandwidth, and bias conditions.

Amplifier Power Relations

- Generic single stage amplifier configuration with input and output matching networks is shown in fig.

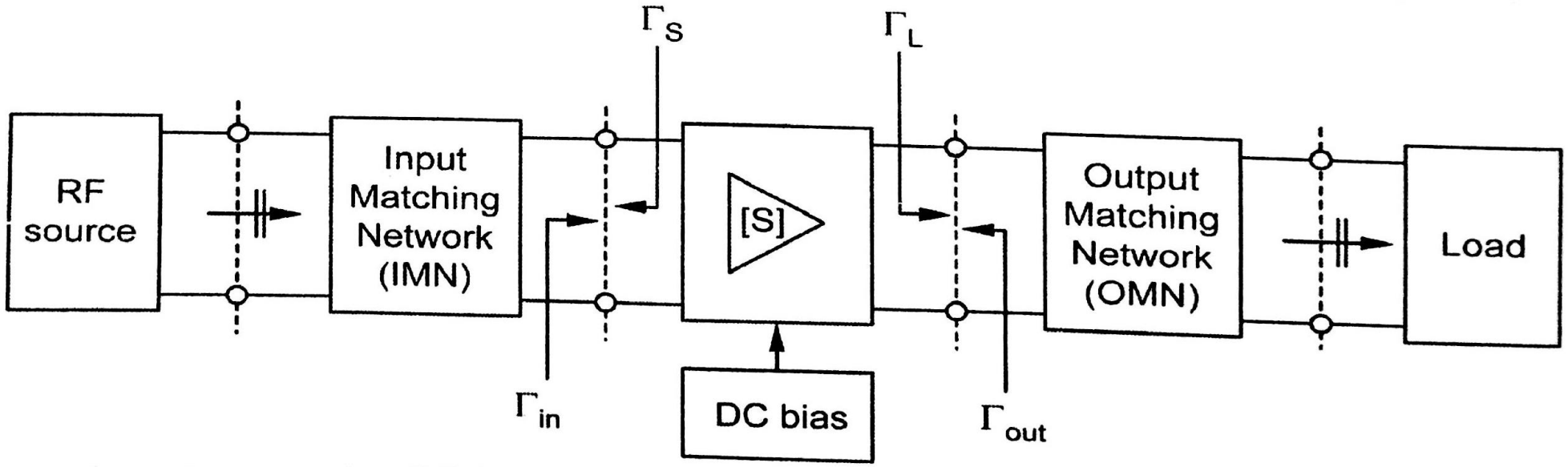

Fig. Generic amplifier system

- Input and output matching networks are needed to reduce undesired reflections and improve the power flow capabilities
- Here amplifier is characterized through its S-parameter matrix at a particular DC bias point

Key Parameters of amplifier, to evaluate its performance are

i. Gain and gain flatness (in dB)

ii. Operating frequency and bandwidth (in Hz)

iii. Output power (in dBm)

iv. Power supply requirements (in V and A)

v. Input and output reflection coefficients(VSWR)

vi. Noise figure (in dB)

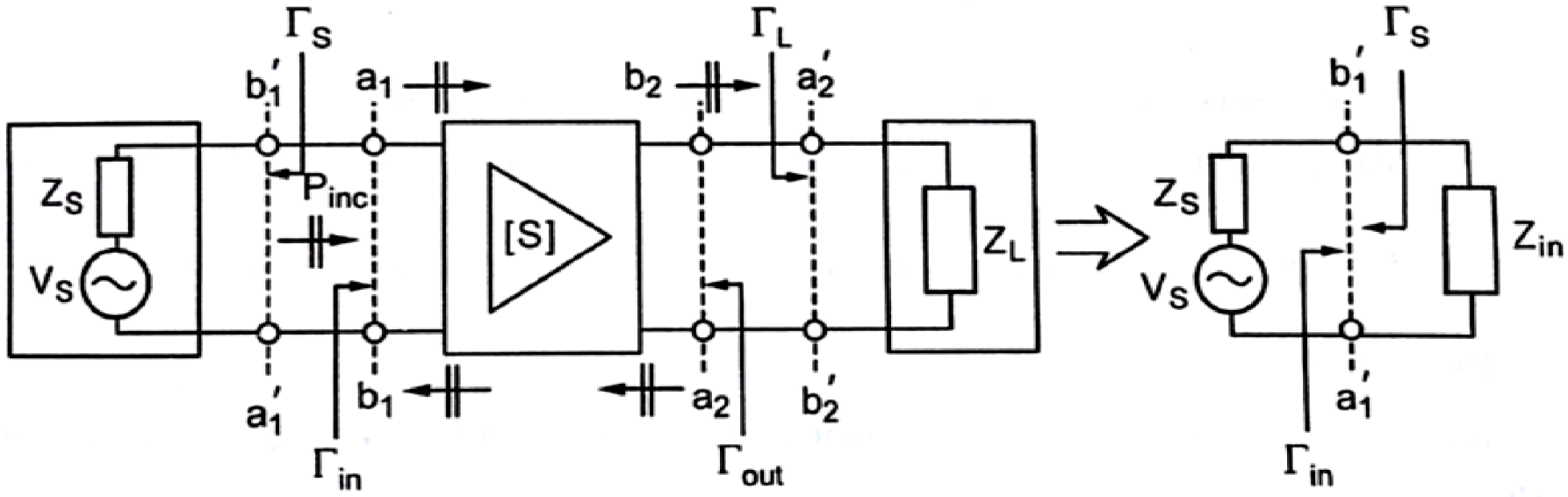

(a) Simplified schematics of a single-stage amplifier

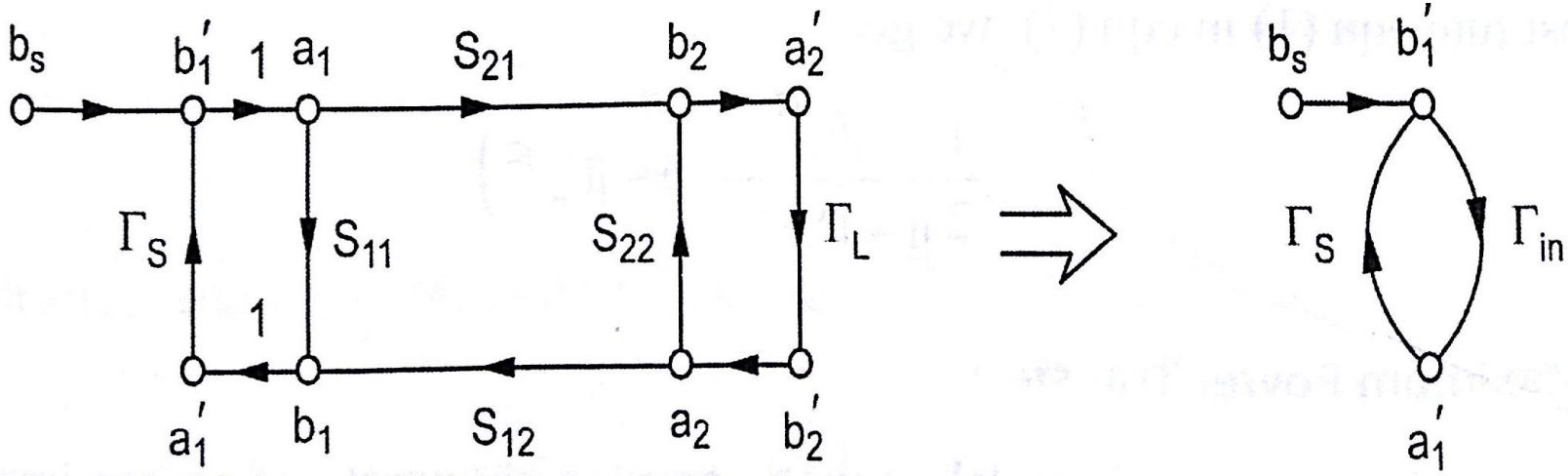

(b) Signal flow graph

Source and load connected to a single-stage amplifier network

RF Source

- RF source is connected to the amplifier network

Incident Wave power:

The incident wave power at node b_1' is given by,

$$P_{inc} = \frac{|b_1'|^2}{2}$$

$$= \frac{1}{2}\frac{|b_s|^2}{|1-\Gamma_{in}\Gamma_s|^2} \quad \rightarrow 1$$

Where, Source node $b_s = \frac{\sqrt{Z_o}}{Z_s+Z_o} V_s$

Z_o – Characteristics Impedance , Zs – Source Impedance

Γ_s - Source Reflection Coefficient and Γ_{in} - Input Reflection Coefficient

This incident power is nothing but the power launched toward the amplifier.

Input power:

The actual input power p_{in} at the input terminal of the amplifier is composed of the incident and reflected power waves

$$P_{in} = P_{inc}\left(1 - |\Gamma_{in}|^2\right) \qquad .....(2)$$

Sub P_{inc} value in above equation,

$$P_{in} = \frac{1}{2}\frac{|b_S|^2}{|1 - \Gamma_{in}\Gamma_S|^2}\left(1 - |\Gamma_{in}|^2\right) \qquad ....(3)$$

Maximum Power Transfer:

If the input impedance is matched with complex conjugate of source impedance ($Z_{in} = Z_s^*$) or in terms of reflection coefficients ($\Gamma_{in} = \Gamma_s^*$), then the maximum power transfer from the source to the amplifier will be occur.

The maximum power transfer from the source P_A is,

$$P_A = P_{in}|_{\Gamma_{in} = \Gamma_s^*}$$

$$= \frac{1}{2}\frac{|b_S|^2}{|1-\Gamma_{in}\Gamma_S|^2}\Big|_{\Gamma_{in}=\Gamma_S^*}\left(1-|\Gamma_{in}|^2\right)$$

$$= \frac{1}{2}\frac{|b_S|^2}{|1-\Gamma_S\Gamma_S|^2}\left(1-|\Gamma_S|^2\right)$$

$$= \frac{1}{2}\frac{|b_S|^2}{\left(1-|\Gamma_S|^2\right)} \qquad \ldots\ldots (4)$$

This expression (4), mainly dependent on Γ_S

If $\Gamma_{in} = 0$ and $\Gamma_S \neq 0$, then equation (4) becomes,

$$P_{inc} = \frac{|b_S|^2}{2} \qquad \ldots\ldots (5)$$

Transducer power gain

Transducer power gain is nothing but the gain of the amplifier when placed between source and load.

$$G_T = \frac{\textit{Power delivered to the load}}{\textit{Available power from the source}}$$

$$= \frac{P_L}{P_A} \qquad \ldots\ldots (6)$$

$$P_L = \frac{1}{2}|b_2|^2 \cdot \left(1 - |\Gamma_L|^2\right) \qquad \ldots\ldots (7)$$

Substitute equations (4) and (7) in equation (6), we get

$$G_T = \frac{|b_2|^2}{|b_S|^2}\left(1-|\Gamma_L|^2\right)\left(1-|\Gamma_S|^2\right) \qquad \ldots\ldots (8)$$

From the Fig we can get b_2 and b_S

$$b_2 = \frac{S_{21}a_1}{1-S_{22}\Gamma_L} \qquad \ldots\ldots (9)$$

$$b_S = \left[1-\left(S_{11}+\frac{S_{21}S_{12}\Gamma_L}{1-S_{22}\Gamma_L}\right)\Gamma_S\right]a_1$$

$$= \left[1-\left(S_{11}\Gamma_S+\frac{S_{21}S_{12}\Gamma_L\Gamma_S}{1-S_{22}\Gamma_L}\right)\right]a_1$$

$$= \left[\frac{(1-S_{11}\Gamma_S)(1-S_{22}\Gamma_L)-S_{21}S_{12}\Gamma_L\Gamma_S}{(1-S_{22}\Gamma_L)}\right]a_1 \qquad \ldots\ldots (10)$$

From the equ (9) and (10), the required ratio $\frac{b_2}{b_s}$ can be calculated

$$\frac{b_2}{b_s} = \frac{S_{21}}{(1-S_{11}\Gamma_S)(1-S_{22}\Gamma_L)-S_{21}S_{12}\Gamma_L\Gamma_S} \qquad \ldots\ldots (11)$$

Substitute equ (11) in equ (8), we get

$$G_T = \frac{(1-|\Gamma_L|^2)|S_{21}|^2(1-|\Gamma_S|^2)}{|(1-S_{11}\Gamma_S)(1-S_{22}\Gamma_L)-S_{21}S_{12}\Gamma_L\Gamma_S|^2} \qquad \ldots\ldots (12)$$

Unilateral power gain(G_{TU}):

When feedback effect of amplifier is neglected i.e.$S_{12} = 0$. It is called unilateral power gain.

$$G_{TU} = \frac{\left(1-|\Gamma_L|^2\right)|S_{21}|^2\left(1-|\Gamma_S|^2\right)}{|1-\Gamma_L S_{22}|^2|1-S_{11}\Gamma_S|^2} \qquad \ldots\ldots\ (13)$$

Additional power relations

Available Power Gain (G_A) at Load:

The available power gain for load side matching ($\Gamma_L = \Gamma_{Out}^*$) is given as

$$G_A = \frac{Power\ available\ from\ teh\ network}{Power\ available\ from\ the\ source}$$

$$= \frac{P_N}{P_A}$$

$$G_A = \frac{|S_{21}|^2\left(1-|\Gamma_S|^2\right)}{\left(1-|\Gamma_{Out}|^2\right)|1-S_{11}\Gamma_S|^2} \qquad \ldots\ldots (14)$$

Power Gain (Operating Power Gain):

The operating power gain is defined as "the ratio of the power delivered to the load to the power supplied to the amplifier".

$$G = \frac{Power\ delivered\ to\ the\ load}{Power\ supplied\ to\ the\ amplifier}$$

$$= \frac{P_L}{P_{in}} \qquad = G_T \frac{P_A}{P_{in}}$$

$$= \frac{P_L}{P_A} \cdot \frac{P_A}{P_{in}} \qquad = \frac{\left(1 - |\Gamma_L|^2\right)|S_{21}|^2}{\left(1 - |\Gamma_{in}|^2\right)|1 - S_{22}\Gamma_L|^2}$$

Stability Considerations

- An amplifier circuit must be stable over the entire frequency range
- The RF circuits (amplifier) tend to oscillate depending on operating frequency and termination

(i) If $|\Gamma| > 1$, then the magnitude of the return voltage wave increases called positive feedback, which causes instability (oscillator)

(ii) If $|\Gamma| < 1$, the return voltage wave is totally avoided (amplifier). Its called as negative feedback

Two port network amplifier is characterized by its S-parameters

The amplifier is stable, when the magnitudes of reflection coefficients are less than unity

$$|\Gamma_L| < 1 \text{ and}$$

$$|\Gamma_S| < 1$$

Stability Circle

Output Stability Circle: The output stability circle equation is given by

$$\left(\Gamma_L^R - C_{out}^R\right)^2 + \left(\Gamma_L^I - C_{Out}^I\right)^2 = r_{out}^2$$

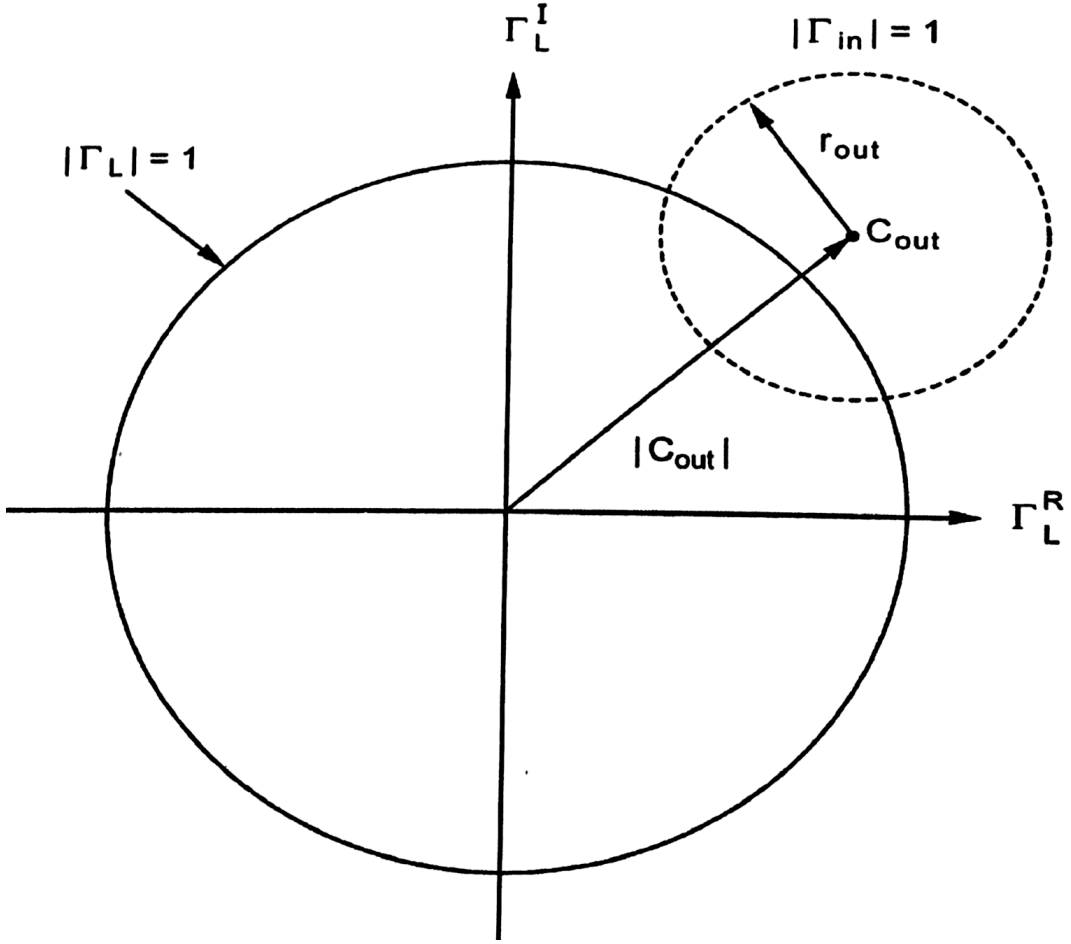

Output Stability circle $|\Gamma_{in}| = 1$ ***in the complex*** Γ_L ***plane***

Circle radius $$r_{Out} = \frac{|S_{12}S_{21}|}{\left||S_{22}|^2 - |\Delta|^2\right|}$$

Where, $\Delta = S_{11}S_{22} - S_{12}S_{21}$

Center of output stability circle $C_{Out} = C_{Out}^{R} + jC_{Out}^{I}$

$$= \frac{\left(S_{22} - S_{11}^{*}\Delta\right)^{*}}{|S_{11}|^2 - |\Delta|^2}$$

When $\Gamma_L = 0$, then $|\Gamma_{in}| = |S_{11}|$, two stability domains of output stability circles are

(i) For $|S_{11}| < 1$, the origin (the point $\Gamma_L = 0$) part is in stable region. Here shaded region is stable.

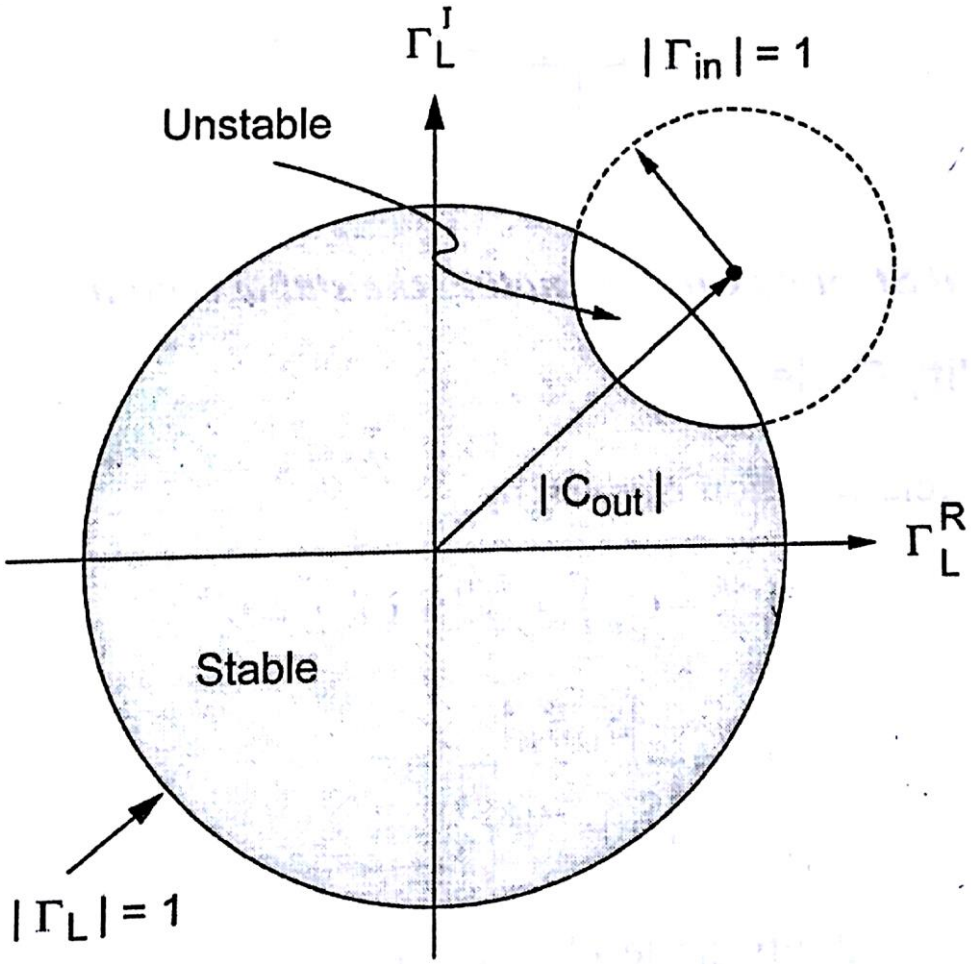

Output Stability Circle denoting the stable regions when $|S_{11}| < 1$

(ii) For $|S_{11}| > 1$, the origin (the point $\Gamma_L = 0$) part is in unstable region.

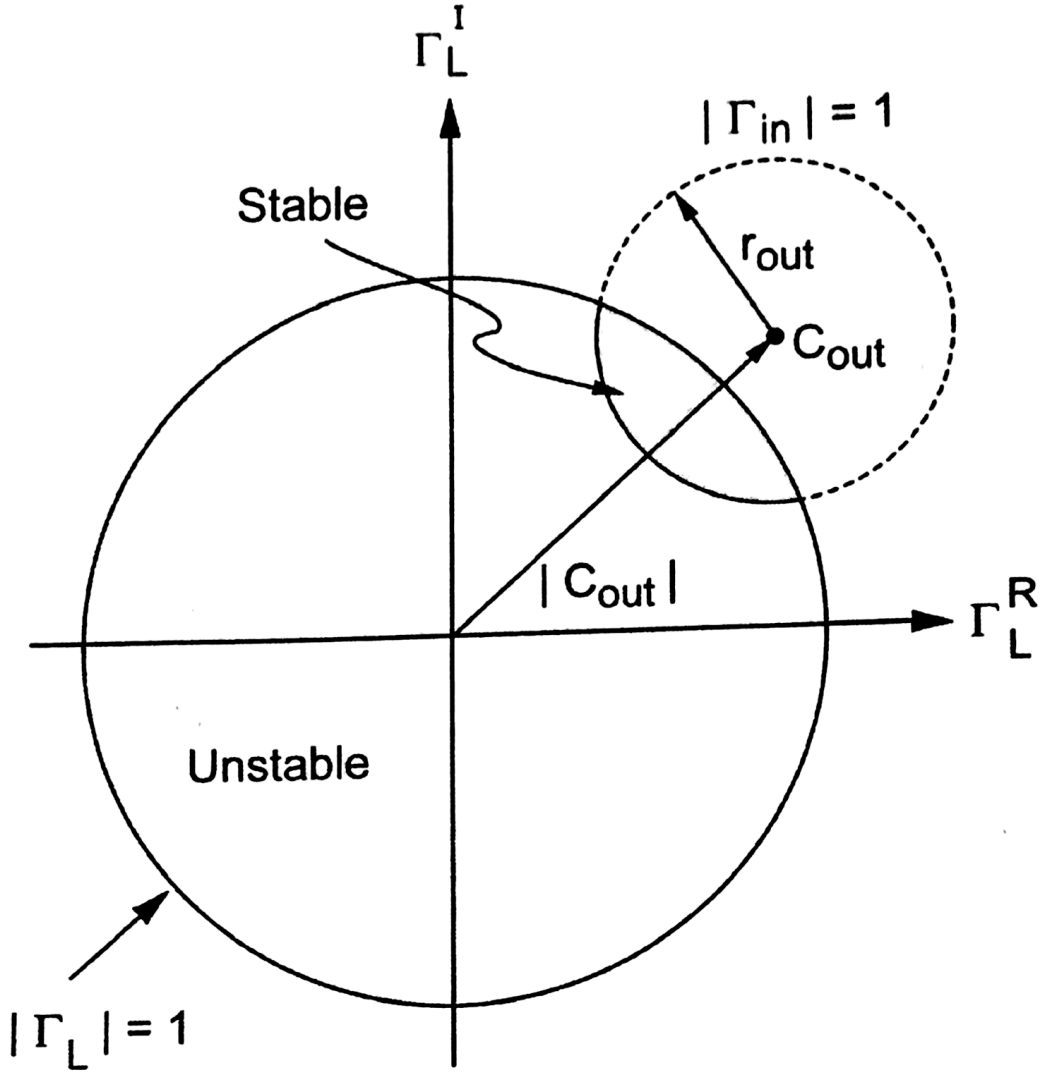

Output Stability Circle denoting the stable regions when $|S_{11}| > 1$

Input Stability Circle:

Input stability circle equation is given by

$$\left(\Gamma_S^R - C_{in}^R\right)^2 + \left(\Gamma_S^I - C_{In}^I\right)^2 = r_{in}^2$$

Circle radius

$$r_{in} = \frac{\left|S_{12}S_{21}\right|}{\left|\left|S_{11}\right|^2 - \left|\Delta\right|^2\right|}$$

Center of the input stability circle $C_{in} = C_{in}^R + jC_{in}^I$

$$= \frac{\left(S_{11} - S_{22}^*\Delta\right)^*}{\left|S_{11}\right|^2 - \left|\Delta\right|^2}$$

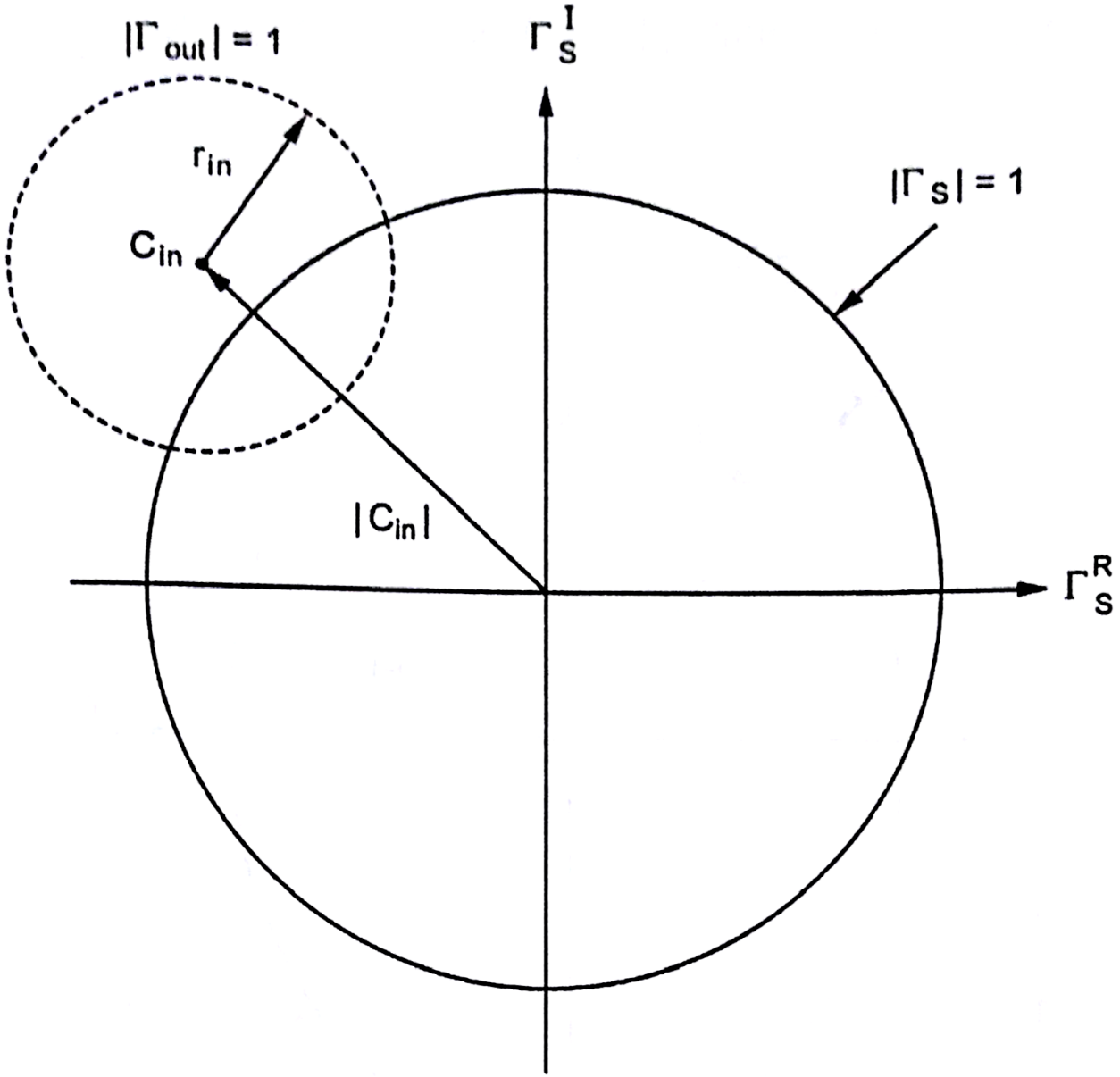

Input stability Circle $|\Gamma_{out}|=1$ in the complex Γ_S plane

Two stability domains of input stability circles are:

(i) When $|S_{22}| < 1$, the center $(\Gamma_S = 0)$ must be stable.

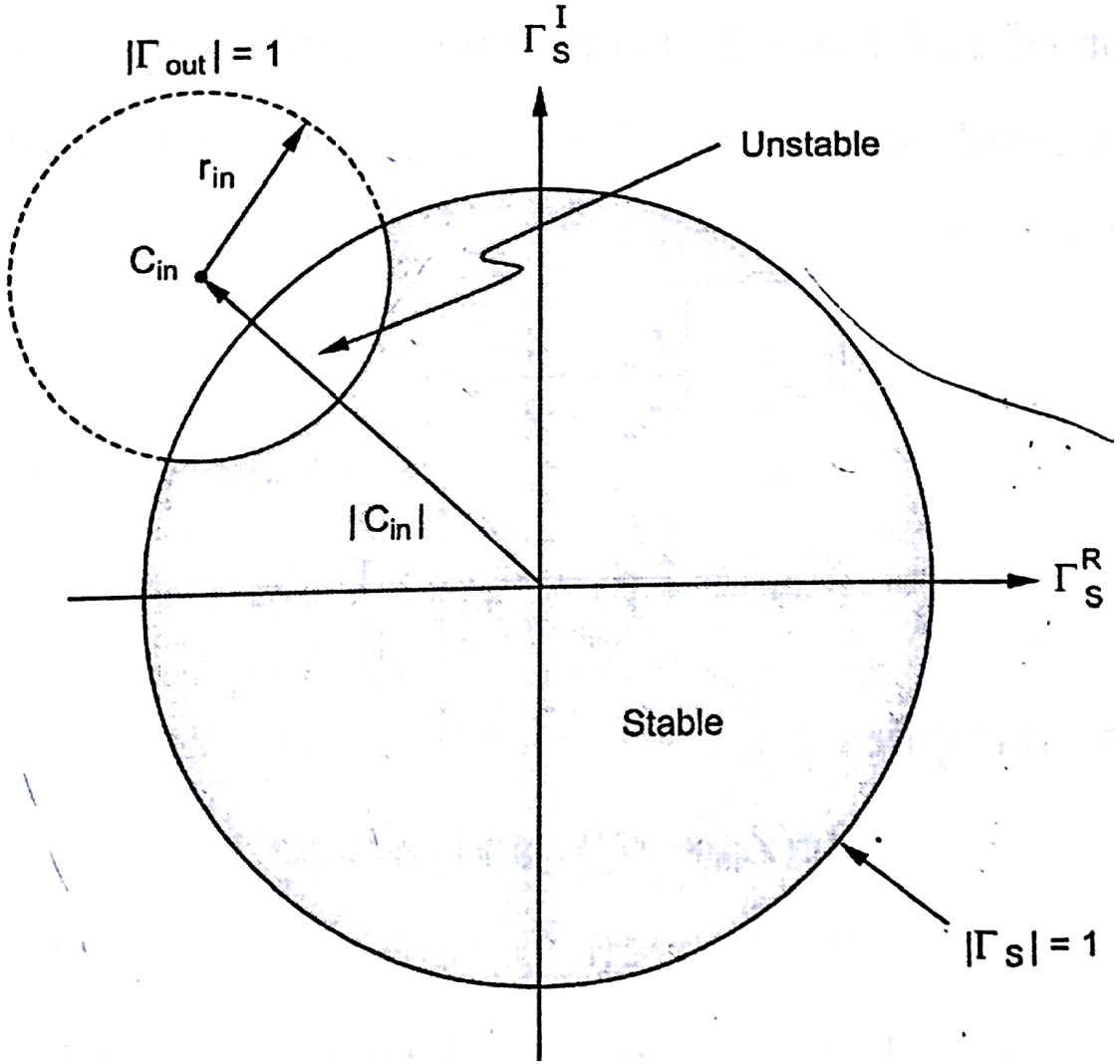

Input Stability Circle denoting the stable regions when $|S_{22}| < 1$

(ii) When $|S_{22}|$ > 1, the center (Γ_S=0) becomes unstable.

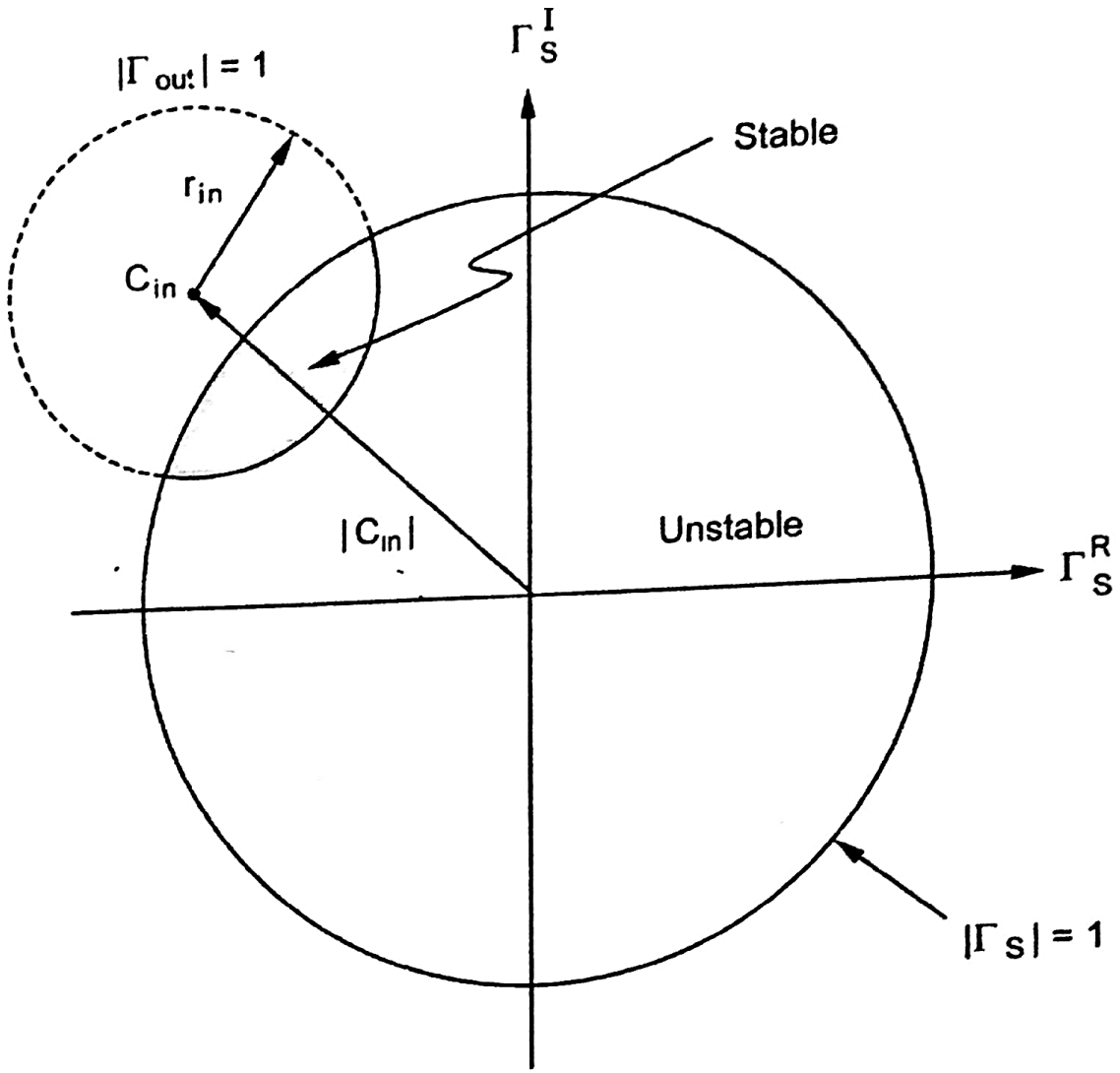

Input Stability Circle denoting the stable regions when $|S_{22}| > 1$

Stabilization Methods:

If the operation of a FET or BJT is unstable, we take steps to make them stable

The instability conditions $|\Gamma_{in}| > 1$ and $|\Gamma_{out}| > 1$ can be written in terms of the input and output impedances

$$|\Gamma_{in}| = \left|\frac{Z_{in} - Z_0}{Z_{in} + Z_o}\right| > 1$$

$$|\Gamma_{out}| = \left|\frac{Z_{out} - Z_0}{Z_{out} + Z_o}\right| > 1$$

Above expression implies that

$$Re(Z_{in}) < 0 \quad \text{and}$$

$$Re(Z_{out}) < 0$$

To stabilize the active devices, a series resistance or a conductance will be added to the port

Configuration at input port:

In the input port, the addition of $R_e(Z_S)$ must compensate the negative contribution of $R_e(Z_{in})$

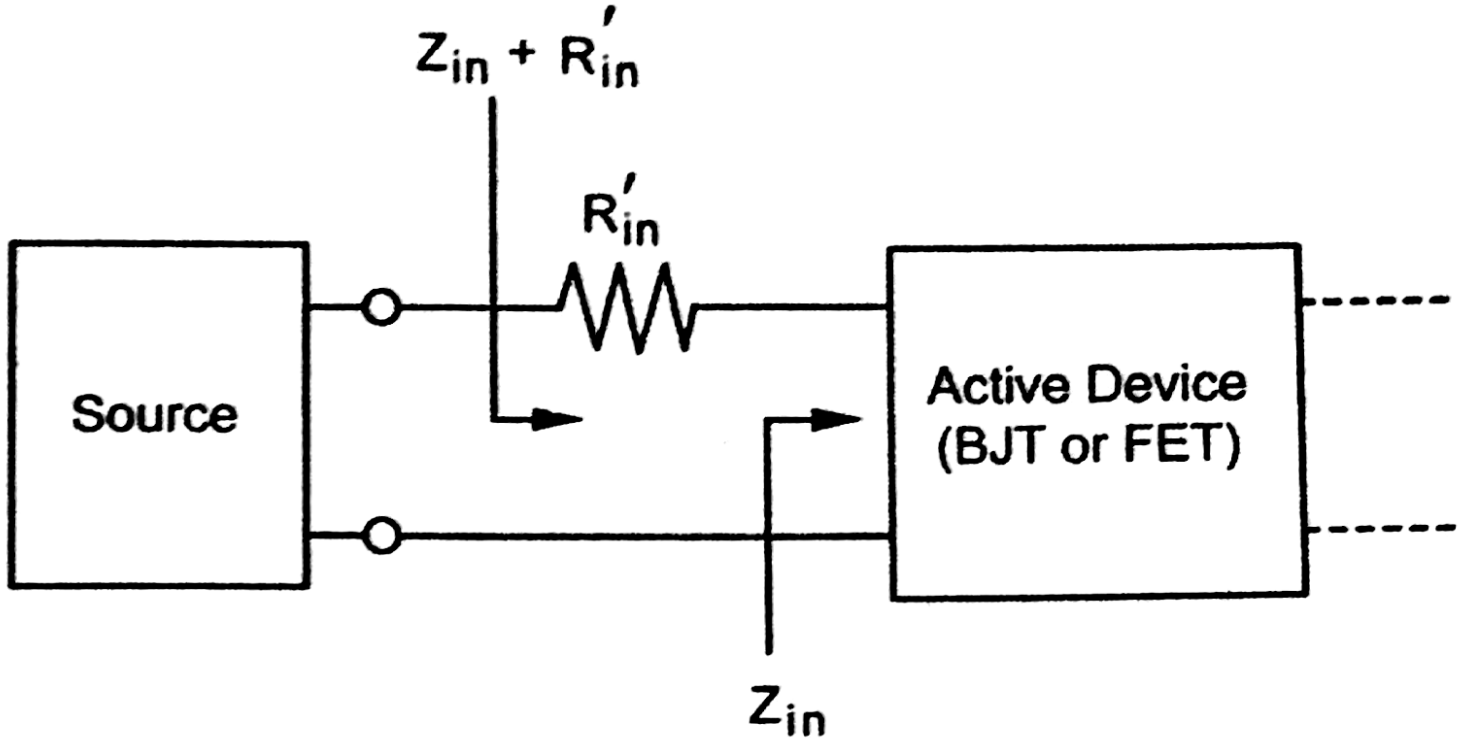

Stabilization of input port through series resistance

$$\mathrm{Re}(Z_{in} + R'_{in} + Z_S) > 0$$

Stabilization of input port through addition of shunt conductance.

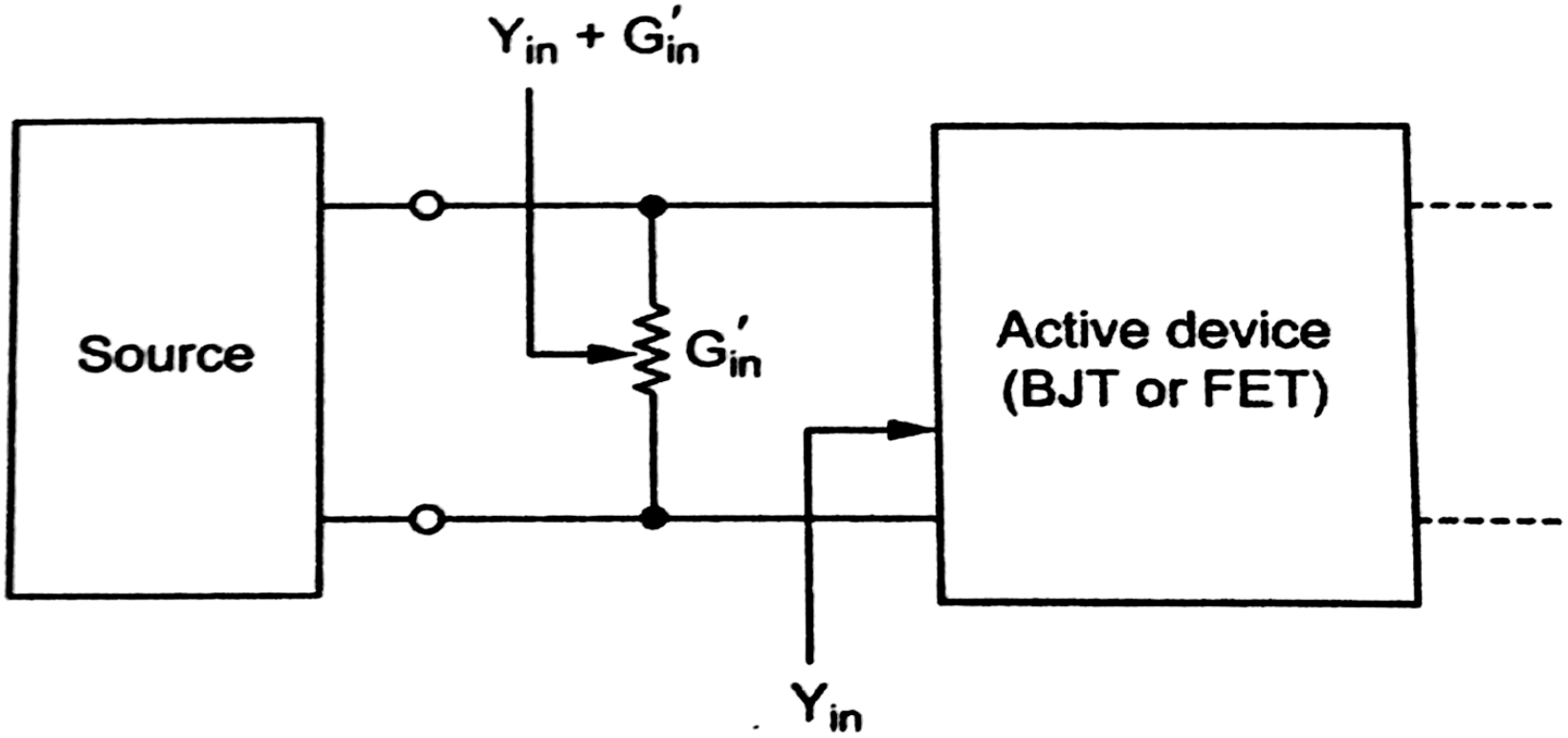

Stabilization of input port through shunt conductance

$$\mathrm{Re}(Y_{in} + G'_{in} + Y_S) > 0$$

Configuration at output port:

In the output port, the addition of $R_e(Z_L)$ must compensate the negative contribution of $R_e(Z_{out})$

$$Re(Z_{out} + R'_{out} + Z_L) > 0$$

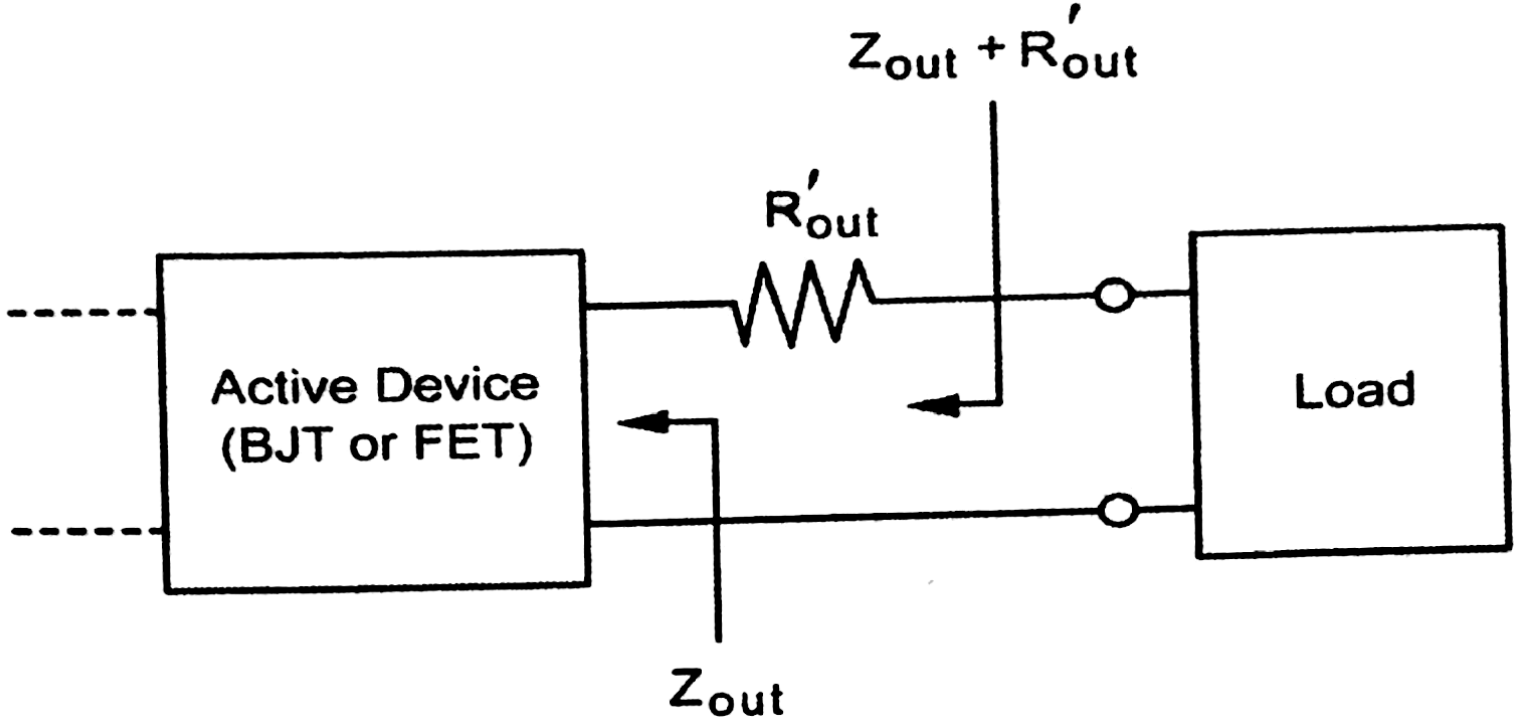

Stabilization of output port through series resistance

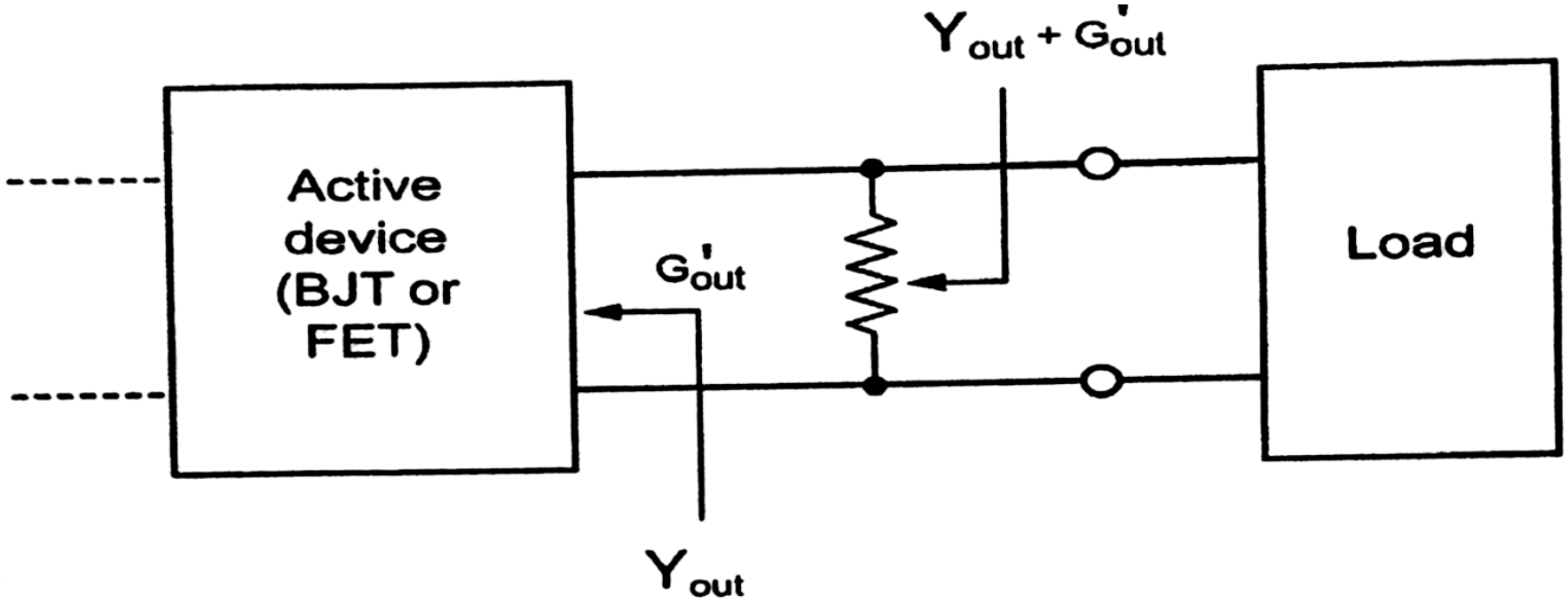

Stabilization of output port through shunt conductance

$$\mathrm{Re}(Y_{out} + G'_{out} + Y_L) > 0$$